Hustler® Parts Manual

HUSTLER® TURF EQUIPMENT

200 South Ridge Road

Hesston, Kansas

67062

WARNING

The engine exhaust from this product contains chemicals known to the state of California to cause cancer, birth defects or other reproductive harm.

NOTICE OF REQUIREMENT OF SPARK ARRESTER MUFFLER

This equipment may create sparks that can start fires around dry vegetation. California Public Resources Code Section 4442.6 provides that it is unlawful to use or operate an internal combustion engine on any forest-covered, brush-covered, or grass-covered land unless the engine is equipped with a spark arrester maintained in effective working order. A spark arrester is a device constructed of nonflammable materials specifically for the purpose of removing and retaining carbon and other flammable particles over 0.0232 of an inch in size from the exhaust flow of an internal combustion engine that uses hydrocarbon fuels or which is qualified and rated by the United States Forest Service. Other states or federal areas may have similar laws. The Operator Should Contact Local Fire Agencies For Laws or Regulations Relating to Fire Prevention Requirements. THIS EQUIPMENT DOES NOT HAVE A SPARK ARRESTER AND YOU SHOULD CONTACT YOUR AUTHORIZED DEALER FOR THE PURCHASE OF A SPARK ARRESTER.

Inspect spark arrester daily; replace every 500 hours or as needed.

The Engine Owner's Manual provides information regarding the U.S. Environmental Protection Agency (EPA) and the California Emission Control Regulation of emission systems, maintenance and warranty.

Keep Engine Owner's Manual with your unit. Should the Engine Owner's Manual become damaged or illegible, replace immediately. Replacements may be ordered per the information found in the Product Information section of the owner's manual.

Federal law and California State law prohibit the following acts or the causing thereof:

1. The removal or rendering inoperative by any person other than for purposes of maintenance, repair, replacement, of any device or element of design incorporated into any equipment for the purposes of emissions control prior to or after its sales or delivery to the ultimate purchaser or while it is in use, or
2. The use of the equipment after such device or element of design has been removed or rendered inoperative by any person.

General Information 1

Frame & Engine Guard

Frame 3-1
Frame - Models Ending in "US" 3-2
Engine Guard & Hitch - S/N 16020001 & Higher 3-3
Engine Guard & Hitch - S/N Prior to 16020001 3-4

Transmissions, Drive Belt, Steering & Brake

Transmission Assembly & Drive Belt 4-1
Transmission Service Parts 4-2
Steering & Brake (Multi-Page) 4-3
Steering Assembly Breakdown 4-4
Steering Box Assembly Breakdown 4-5

Wheels & Tires

Wheel & Tire - 48" Mowers 5-1
Front Tire Breakdown - 13 X 5 Tire - 48" Mowers 5-2
Wheel & Tire - 54" & 60" Mowers 5-3
Front Tire Breakdown - 13 X 6.5 Tire - 54" & 60" Mowers 5-4
Drive Wheel Breakdown - 20 X 10 Tire - 48" Mowers 5-5
Drive Wheel Breakdown - 23 X 11 Tire - 54" & 60" Mowers 5-6

Engine, Muffler & Fuel System

Engine, Kawasaki 6-1
Engine Service Parts, Kawasaki 6-2
Fuel System, Kawasaki - Without Carbon Canister (Multi-Page) 6-3
Fuel System, Kawasaki - With Carbon Canister (Multi-Page) 6-4
Engine, Kohler (Multi-Page) 6-5
Engine Service Parts, Kohler 6-6
Fuel System, Kohler - Without Carbon Canister (Multi-Page) 6-7
Fuel System, Kohler - With Carbon Canister (Multi-Page) 6-8
Fuel Tank Service Parts 6-9

Battery, Fenders, Instrument Panel & Wire Harness

Fenders & Battery 7-1
Instrument Panel, Kawasaki 7-2
Instrument Panel, Kohler 7-3

Deck, Deck Belt, Blades & Deck Lift

48" Service Deck 8-1
48" Deck Pulleys & Spindles 8-2
48" Deck 8-3
54" Service Deck 8-4
54" Deck Pulleys & Spindles 8-5
54" Deck 8-6
60" Service Deck 8-7
60" Deck Pulleys & Spindles 8-8
60" Deck 8-9
Spindle Service Parts - 605380 8-10
Deck Lift & Deck Height (Multi-Page) 8-11

Seat & ROPS

Seat 9-1
Seat Service Parts - 605812 9-2
Seat Service Parts - 606474 9-3
Seat Service Parts - 605566 9-4
ROPS 9-5

General Information

This manual covers Hustler® FasTrak® SDX models ***933945, 933952, 933960, 934380US, 934398US, 934406US, 936112, 936120, 936138, 936146US, 936153US & 936161US***.

Service Literature

PART NO.	DESCRIPTION
605723	OPERATOR'S MANUAL
121669	WARRANTY STATEMENT
121878	GENERAL SERVICE MANUAL

Options Available From Your Dealer

PART NO.	DESCRIPTION
933655	CATCHER
121074	CATCHER ADAPTER KIT 48" DECK
121075	CATCHER ADAPTER KIT 54" DECK
121076	CATCHER ADAPTER KIT 60" DECK
600213	FLEX FORK 48"
605123	FLEX FORK 54" & 60"
121472	STRIPE KIT
121474	MULCH KIT 48" DECK
121475	MULCH KIT 54" DECK
121476	MULCH KIT 60" DECK
121478	HIGH VACUUM KIT 48" DECK
121479	HIGH VACUUM KIT 54" DECK
121480	HIGH VACUUM KIT 60" DECK
121482	LIGHT KIT
333724	STEERING EXTENSION KIT

Note: *When ordering parts, you must use the part number as shown for each part, not the index number. Always give the model and serial number to your parts and service representative.*

Note: *Items sold in bulk such as seals and hoses are sold by the foot.*

Using This Manual

This manual is part of a service package for the Hustler® mowers. Use of this manual in conjunction with other Hustler® mower and component manuals will provide the information necessary to service and maintain Hustler® mowers.

This Parts Manual provides a complete parts listing for the unit. Use this manual when ordering parts. Illustrations used were current at the time of printing, but subsequent production changes may cause your machine to vary slightly in detail. Excel Industries, Inc. reserves the right to redesign and change the machine as deemed necessary, without notification. If a change has been made to your machine which is not reflected in this parts manual, see your authorized dealer for current information and parts.

The Service Manual is a service guide for use by Service Technicians. It provides the necessary information needed to perform normal maintenance requirements on these units.

The Operator's Manual provides fundamental operational information and operational safety that is needed when operating the mower.

The component manuals are furnished by the various manufacturers to be used for the troubleshooting and servicing of their products.

Hardware Description Codes & Abbreviations

The following codes are used throughout this parts manual. Refer to this list when ordering parts.

ABBREVIATION	DESCRIPTION	ABBREVIATION	DESCRIPTION
CB	CARRIAGE BOLT	MB	MACHINE BUSHING
CE	CLEVIS PIN	MS	MACHINE SCREW
CN	CLIP NUT	NT	NUT
CP	COTTER PIN	SC	SELF TAPPING CAP SCREW
CS	CAP SCREW	SH	SOCKET HEAD
CW	CUP WASHER	SB	SHOULDER BOLT
FDRW	FENDER WASHER	SS	SET SCREW
FW	FLAT WASHER	OD	OUTSIDE DIAMETER
HX	HEX HEAD	ID	INSIDE DIAMETER
LW	LOCK WASHER	WN	WELD NUT

Standard Torques

The following chart lists the standard torque values for the threaded fasteners found in this manual. Torque all cap screws, nuts and set screws to these values unless a different torque is shown in the Notes section next to the fastener.

SIZE	FT-LBS	N•M	SIZE	FT-LBS	N•M
.250	8.2	11.1	M3	1	1.3
.312	17	23	M4	2.2	3
.375	30	40	M5	4.5	6.1
.438	48	65	M6	7.7	10.4
.500	73	99	M8	18.5	25
.562	105	143	M10	37	50
.625	145	200	M12	64	87
.750	260	350	M14	80	108.5
.875	420	565	M16	160	215
1.00	625	850	M20	320	435
			M24	555	750

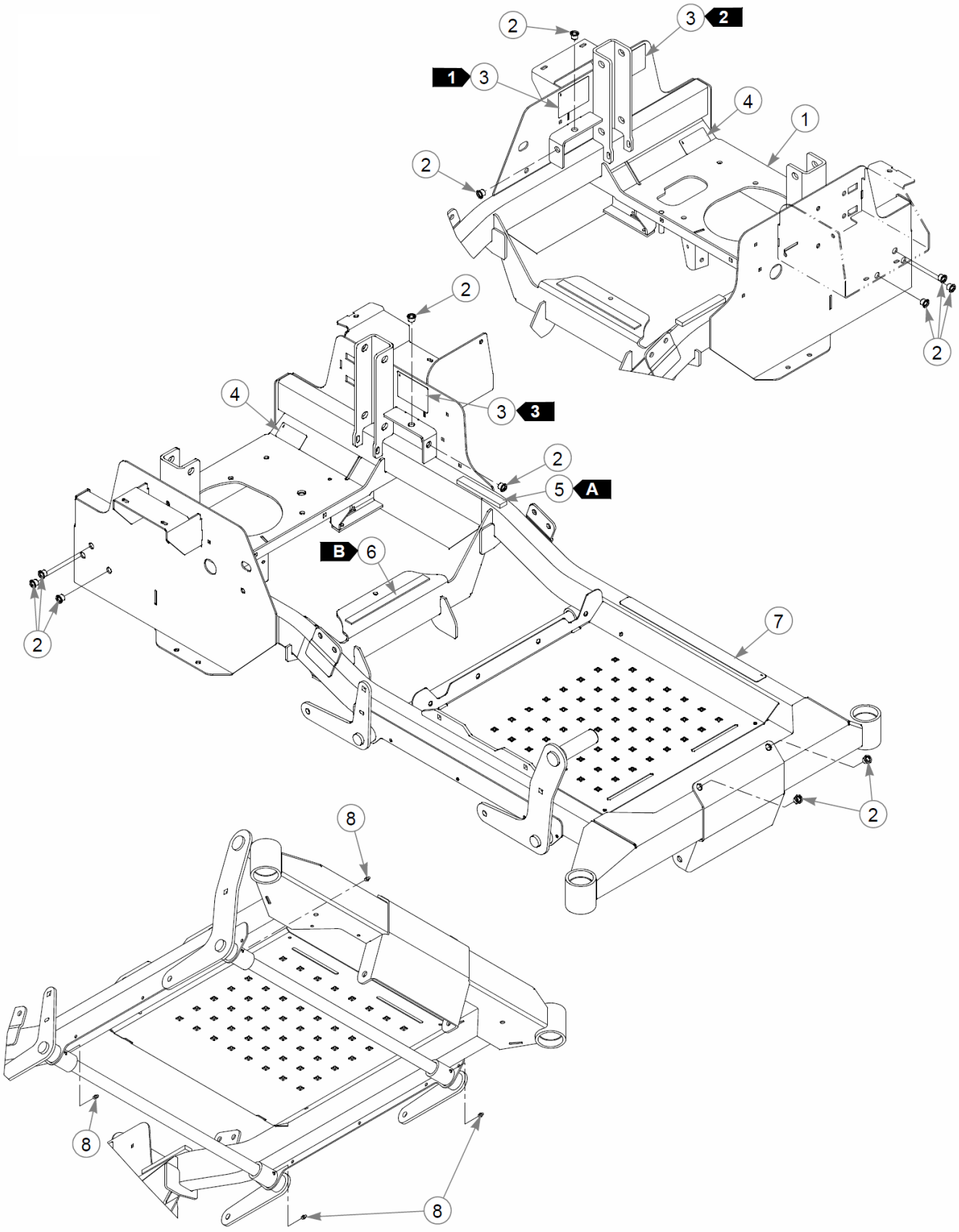
2
3
2
1
3
4
1
2
2
2
4
3
3
2
5
A
B
6
2
7
2
8
8
8

Item	Part No.	Qty	Name
1	552850	1	48 FRAME (WITH DECALS)
2	808493	12	RIVET NUT, 3/8-16 THREA
3	N/A	3	SERIAL NUMBER / SPEC DECAL
4	602041	2	DECAL, HOT
5	713198	5"	SEAL 3/8x3/4 SOLD BY FT
6	033035	9"	WEATHERSTRIP .12X.75
7	601993	1	DECAL, SAFE OPERATION
8	015495	4	GREASE FITTING STRAIGHT

Comments for Page: Frame

SEAL/WEATHERSTRIP LENGTHS:

A: 5.0"

B: 9.0"

1. Serial number decal. In the event the serial number decal becomes damaged or illegible, please contact your dealer to order a replacement.
2. EPA compliance decal.
3. Patent numbers decal.
4. The frames include decals & hardware.

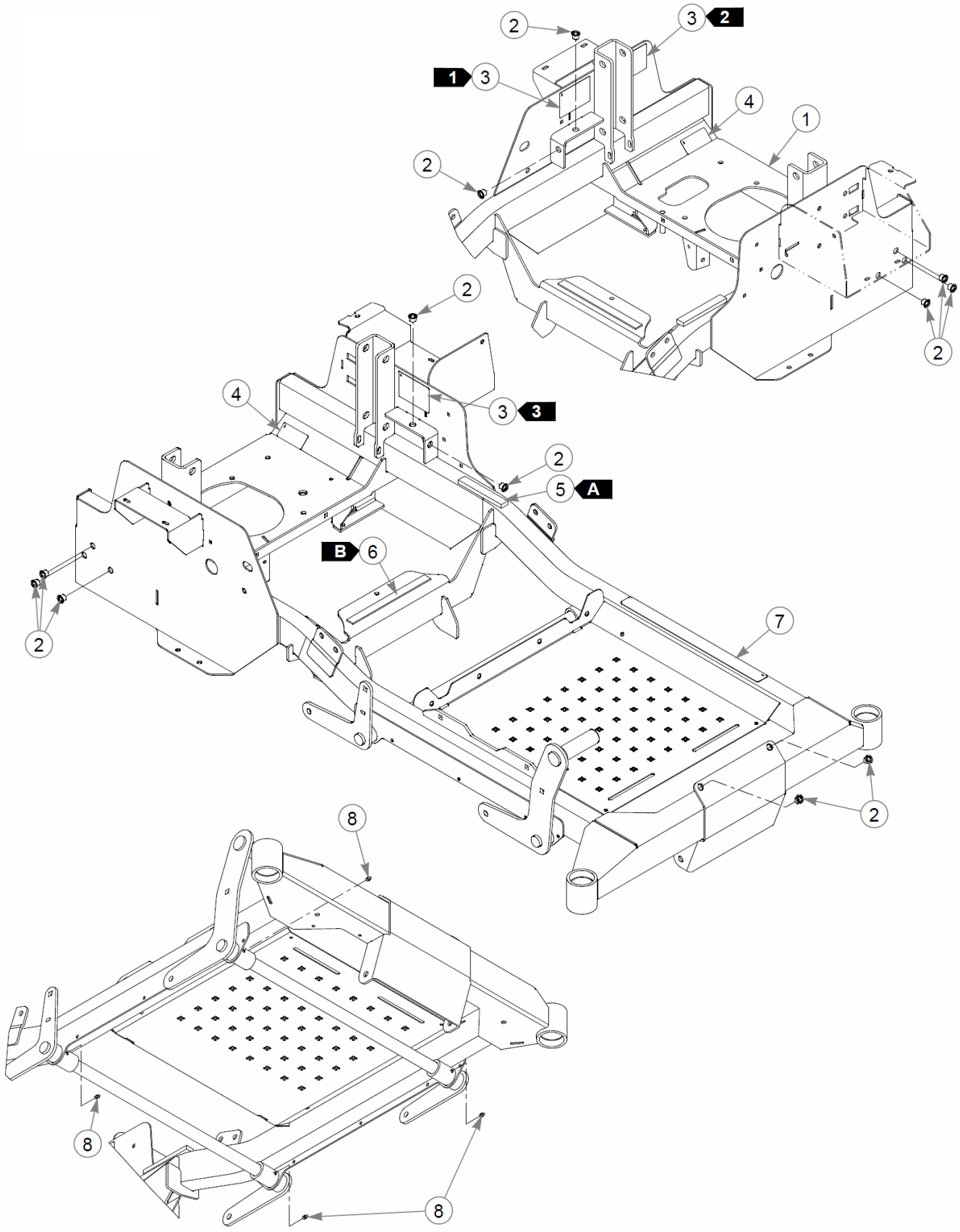
2
3
2
1
3
4
1
2
2
2
4
3
3
2
5
A
B
6
2
7
2
8
8
8

Item	Part No.	Qty	Name
1	553774	1	SVC, FRAME FSX 48" US
Not Shown	553775	1	SVC, FRAME FSX 54/60" US
2	808493	12	RIVET NUT, 3/8-16 THREA
3	N/A	3	SERIAL NUMBER / SPEC DECAL
4	602041	2	DECAL, HOT
5	713198	5"	SEAL 3/8x3/4 SOLD BY FT
6	033035	9"	WEATHERSTRIP .12X.75
7	601993	1	DECAL, SAFE OPERATION
8	015495	4	GREASE FITTING STRAIGHT

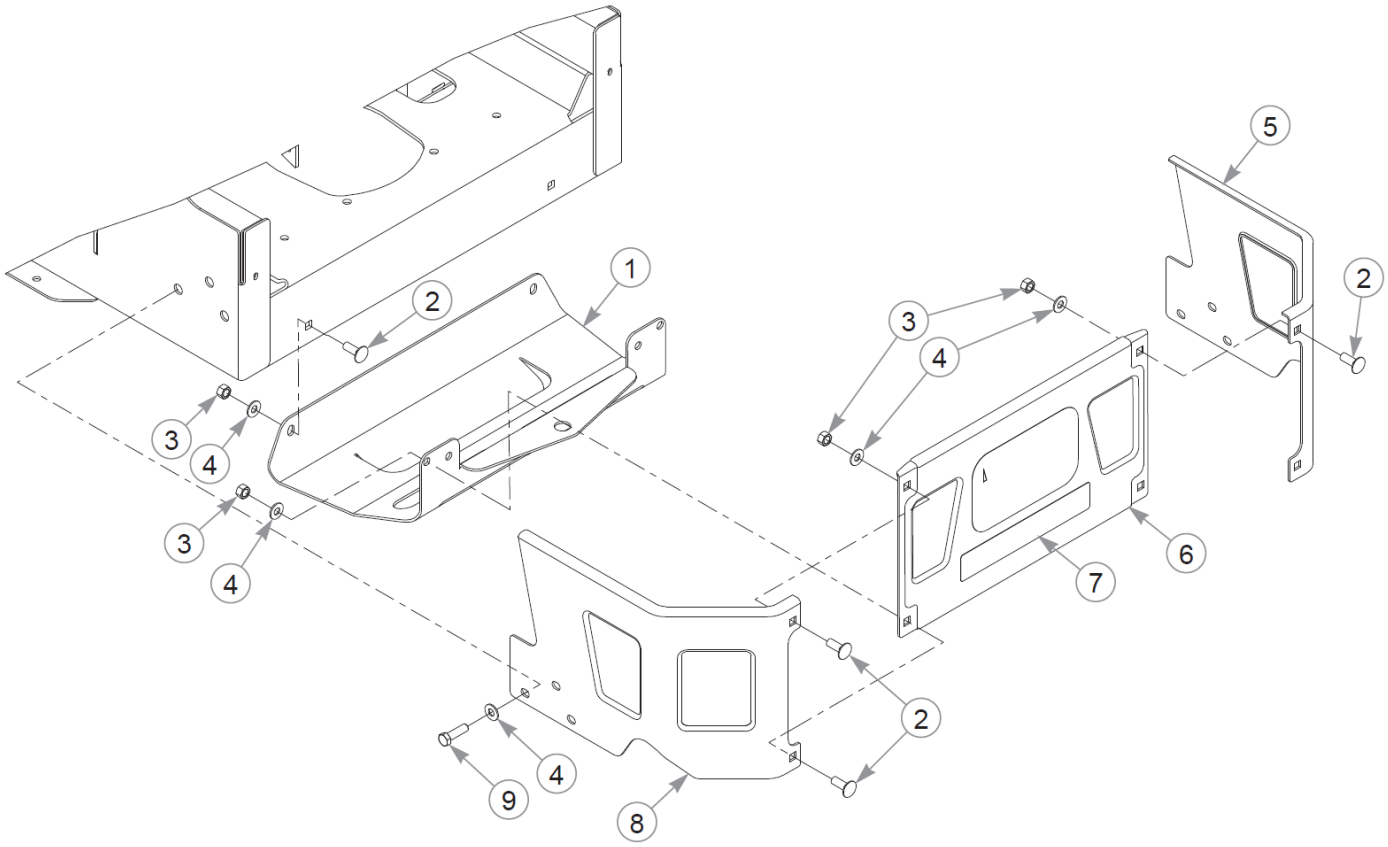
1
2
3
4
3
4
5
2
3
4
6
7
2
4
9
8

Item	Part No.	Qty	Name
1	119977	1	HITCH PLATE
2	025395	6	CB .375-16X 1.00 G5 ZN
3	054502	6	NT .375-16HXG5
4	767954	12	FW 0.379X.82X.06 HD ZN
5	121134	1	GUARD, RH
6	553123	1	SVC PART, STAMPED BUMPER
7	604770	1	DECAL, "H" LOGO
8	121133	1	GUARD, LH
9	052860	6	CS .375-16X1.25 HX G5 ZN

Comments for Page: Engine Guard & Hitch - S/N 16020001 & Higher

1. The center guard includes the decal.

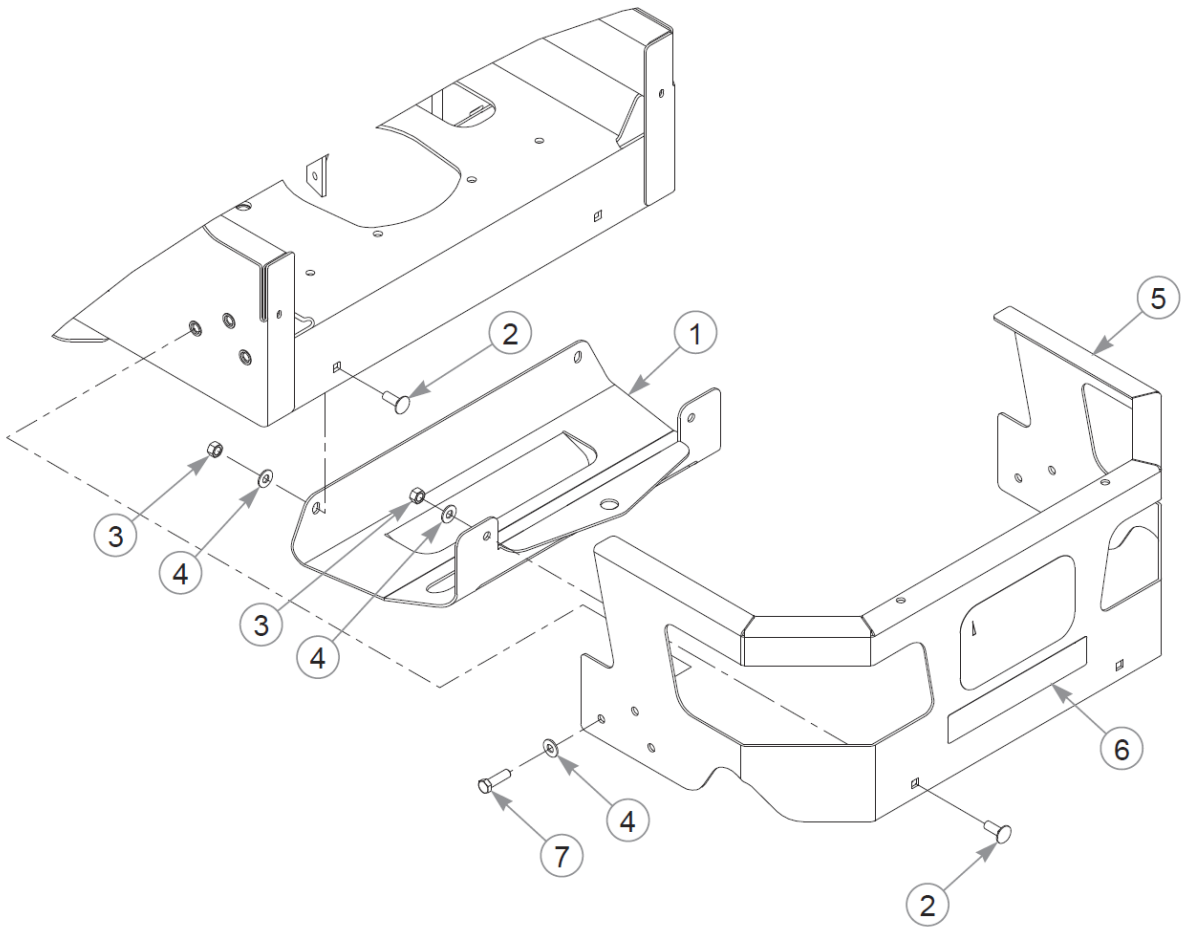
5
2
1
3
4
3
4
6
4
7
2

Item	Part No.	Qty	Name
1	119977	1	HITCH PLATE
2	025395	4	CB .375-16X 1.00 G5 ZN
3	054502	4	NT .375-16HXG5
4	767954	10	FW 0.379X.82X.06 HD ZN
5	552857	1	ENGINE GUARD (W/ DECAL)
6	604770	1	DECAL, "H" LOGO
7	052860	6	CS .375-16X1.25 HX G5 ZN

Comments for Page: Engine Guard & Hitch - S/N Prior to 16020001

1. The engine guard includes the decal.

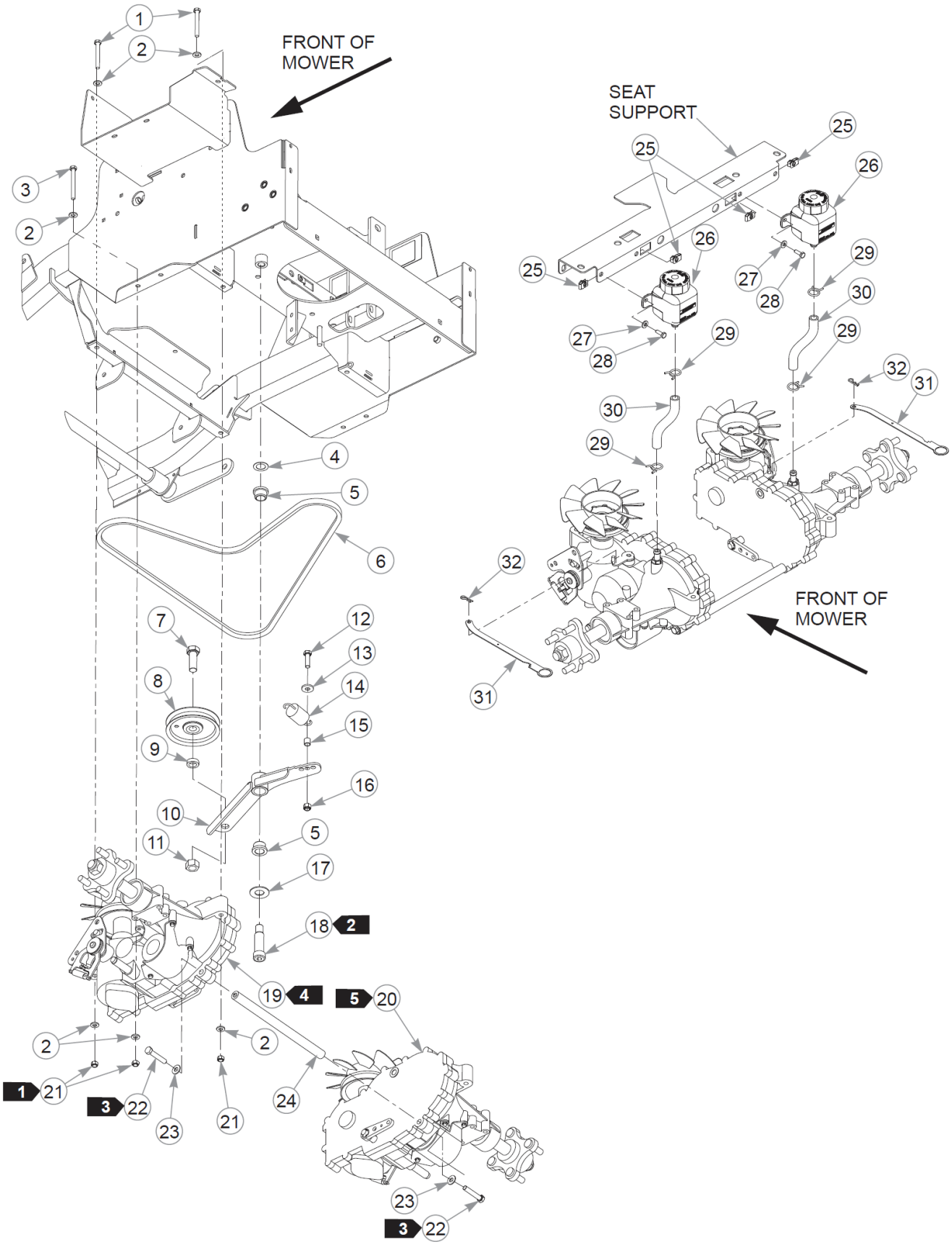
FRONT OF MOWER
SEAT SUPPORT
FRONT OF MOWER

Item	Part No.	Qty	Name
1	710087	4	CS .312-18X2.500HXG5
2	768523	16	FW 0.343SAE
3	043067	4	CS .312-18X3.000HXG5
4	704791	1	FW .781X1.25X.02 ZN
5	781153	2	BUSHING, UHMW
6	605468	1	DRIVE BELT
7	025007	1	CS .62511X1.750HXG5
8	607525	1	PULLEY, IDLER
9	600296	1	SPACER, DECK IDLER
10	122722	1	KIT, TENSION ARM
11	016972	1	NT .625-11 HX G5 ZN
12	052860	1	CS .375-16X1.25 HX G5 ZN
13	712919	1	FW 0.406X1.00X.12 HD ZN
14	036384	1	SPRING 1/4 COIL PL 1.23
15	605481	1	BUSHING
16	086660	1	NT .375-16NLG8
17	025296	1	FW .760X1.63X0.08 ZN
18	601084	1	SB .750X 2.000 SH.625-11
19	605500	1	ZT3400, 21.04:1
20	605501	1	ZT3400, 21.04:1
21	058776	8	NT .312-18NLG5
22	016410	2	CS .375-16X2.000HXG5
23	767954	2	FW 0.379X.82X.06 HD ZN
24	600987	1	ZT SPACER TUBE
25	601982	4	CN .250-20X .150 MAX THK
26	605217	2	RESERVOIR, SINGLE FTNG
Not Shown	600767	2	CAP, OVERFLOW TANK
27	768515	4	FW 0.281SAE
28	055939	4	CS .250-20X0.75 HX G5 ZN
29	601001	4	SPRING CLAMP, .75" DIA
30	605218	2	OVERFLOW HOSE, FST
31	120126	2	LINK, TOW VALVE
32	706549	2	HP0.080X1.190

Comments for Page: Transmission Assembly & Drive Belt

1. Torque to 17 ft-lbs.
2. Torque to 100 ft-lbs.
3. Torque to 30 ft-lbs.
4. Left side transmission.
5. Right side transmission.
6. P/N 605217 RESERVOIR includes 600767 CAP.

This page intentionally left blank

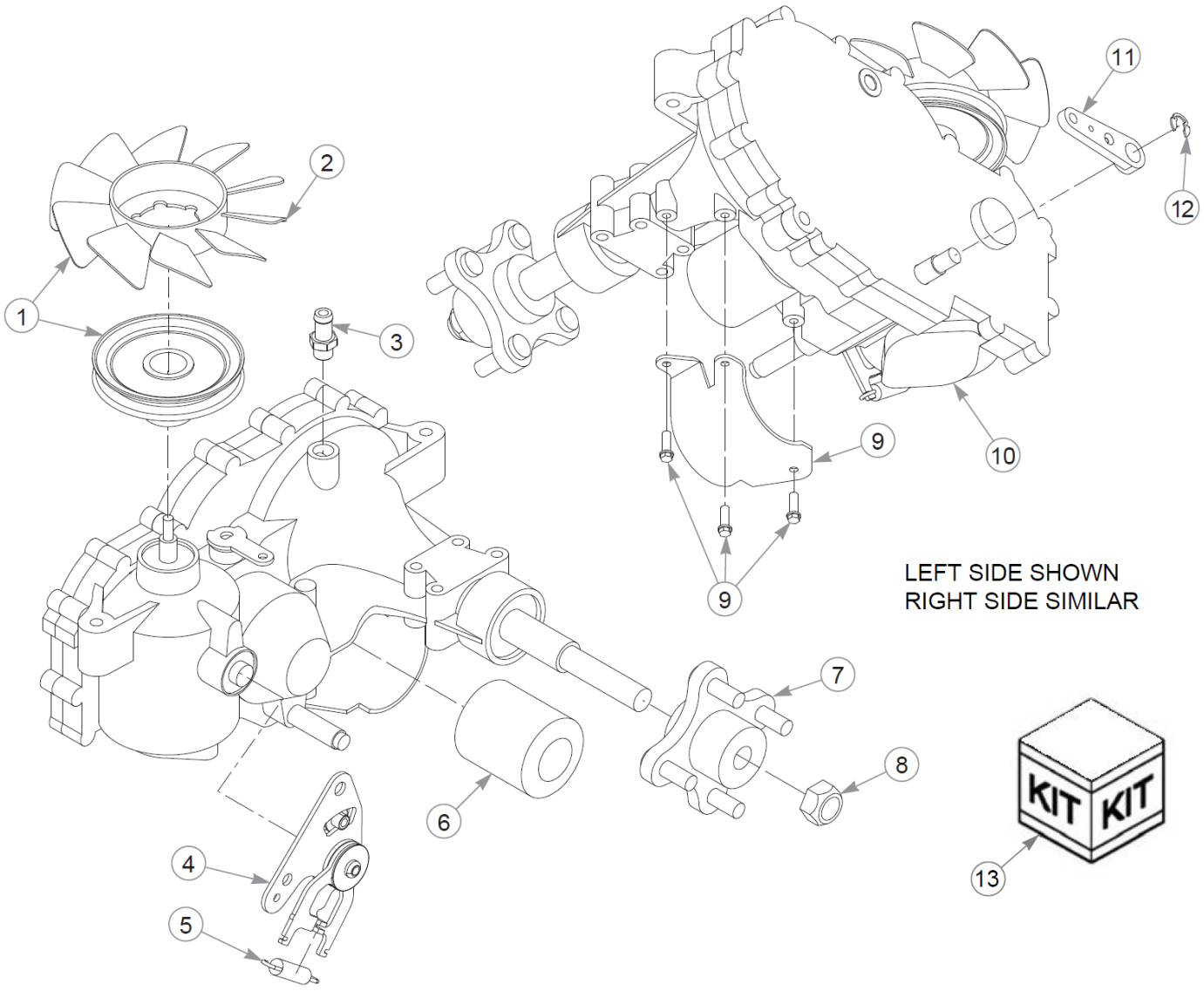
1
2
3
4
5
6
7
8
9
9
10
11
12
13
KIT
KIT
LEFT SIDE SHOWN
RIGHT SIDE SIMILAR

Item	Part No.	Qty	Name
1	603866	1	FAN/PULLEY KIT
2	607728	1	FAN - 7.0" (10 BLADE)
3	605608	1	FITTING, TRANSMISSION
4	605778	1	RTN, LEFT
Not Shown	605779	1	RTN, RIGHT
5	604903	1	HG RTN SPRING
6	600976	1	HYDRAULIC OIL FILTER
7	601433	1	KIT, HUB 4 BOLT
Comments for Part Num. 601433 CUSTOMER SERVICE NOTE: Lug Studs are not sold separately.			
8	788877	1	NUT, H-G ZT HUB
9	600975	1	GUARD, TRANS FILTER
Not Shown	600974	1	GUARD, TRANS FILTER
10	603572	1	COVER, ZT3100 CHRG PUMP
11	601221	1	ZT2800 BRAKE ARM - 2007
12	600972	1	CLIP, RETAINING
13	606830	1	OIL RETENSION KIT,
14	603223	1	O-RING, ZT28/3100 CHARGE

Comments for Page: Transmission Service Parts

1. The hub kit (601433) includes the nut.
2. The filter guard kits and the charge cover kit include bolts.
3. The left and right returns (605778 & 605779) include springs.

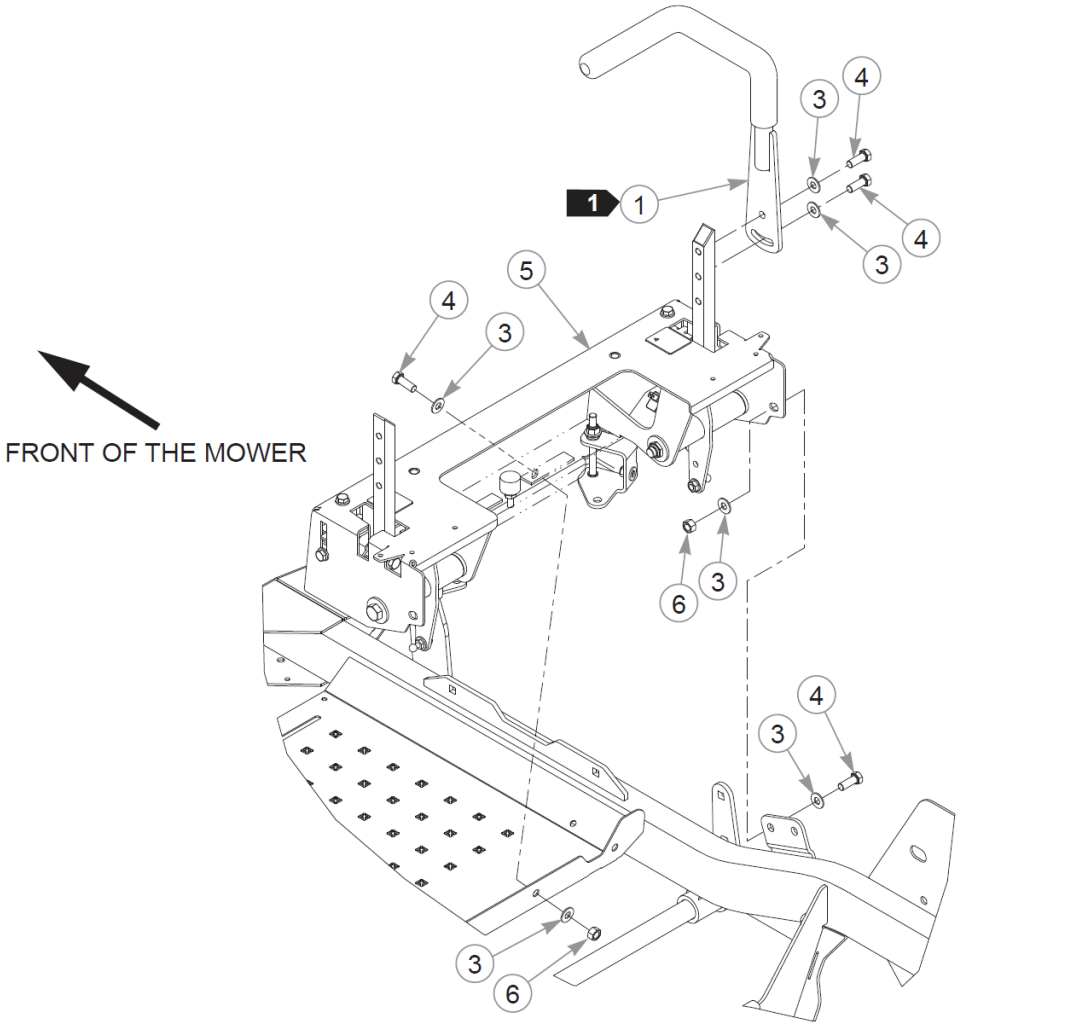
1
1
3
4
4
3
5
4
3
FRONT OF THE MOWER
6
3
4
3
3
6

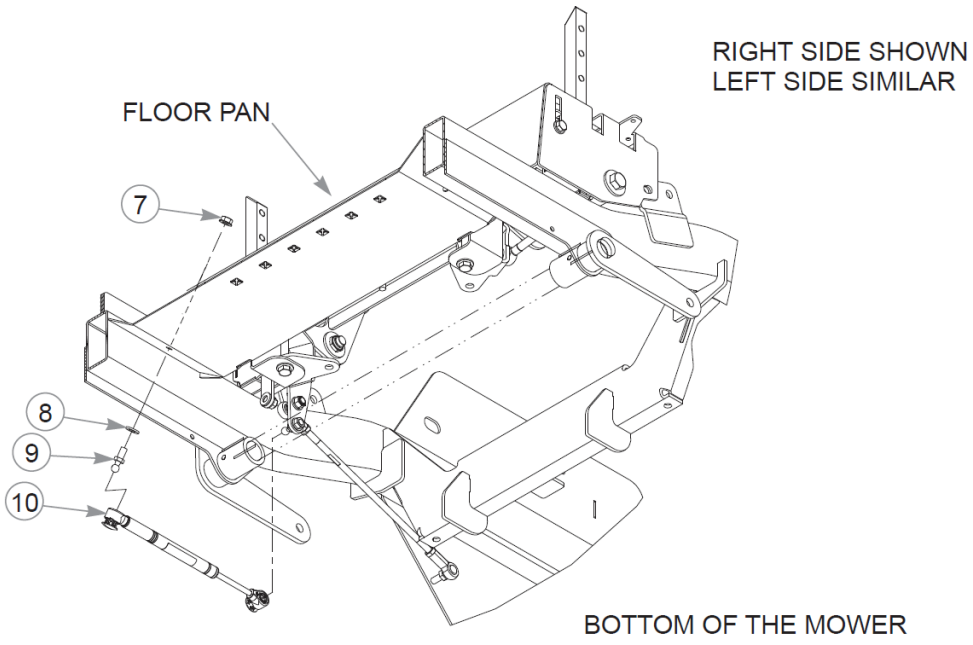
RIGHT SIDE SHOWN
LEFT SIDE SIMILAR
FLOOR PAN
7
8
9
10
BOTTOM OF THE MOWER

Item	Part No.	Qty	Name
1	605383	1	STEERING BAR W/A, RH
Not Shown	781260	1	GRIP, STEERING BAR
2	605384	1	STEERING BAR W/A, LH
Not Shown	781260	1	GRIP, STEERING BAR
3	767954	24	FW 0.379X.82X.06 HD ZN
4	036244	10	CS .375-16X1.00 HX G5 ZN
5	N/A	1	STEERING ASSEMBLY
6	054502	6	NT .375-16HXG5
7	016832	2	NT .312-18FLKG5
8	768523	10	FW 0.343SAE
9	781922	2	BALL STUD
10	603983	2	DAMPER
11	605724	1	DECAL, FASTRAK SDX
12	086660	4	NT .375-16NLG8
13	605145	2	BRAKE ROD ASSEMBLY
14	080655	2	CS .375-16X1.500HXG5
15	601131	2	SPRING, BRAKE ARM RET.
16	601051	2	OVERTRAVEL SPRING
17	016816	2	NT .250-20FLKG5
18	120671	1	BRAKE SPRING LINK, RS
19	120672	1	BRAKE SPRING LINK, LS
20	055939	2	CS .250-20X0.75 HX G5 ZN
21	600981	2	PUMP ROD ASSEMBLY
22	023655	4	NT 0.312-24 NL G8
23	604456	2	SPACER, PUMP ARM

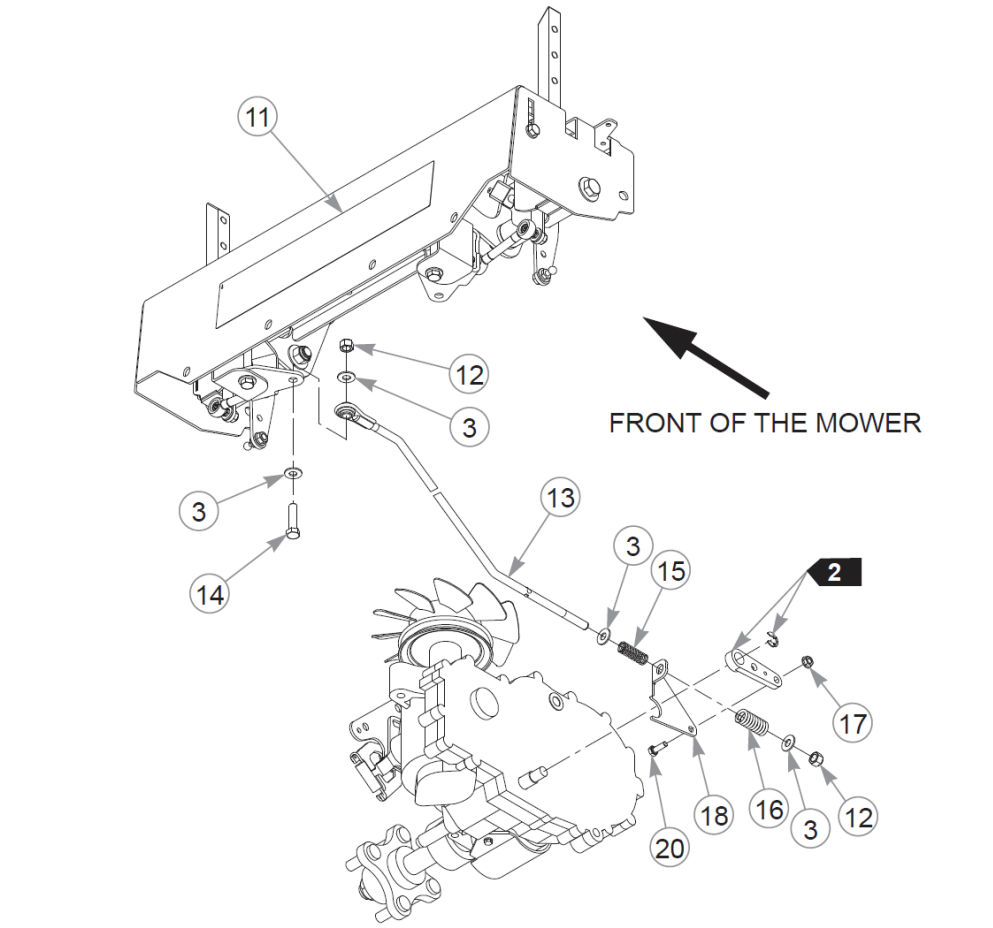

RIGHT SIDE SHOWN
LEFT SIDE SIMILAR

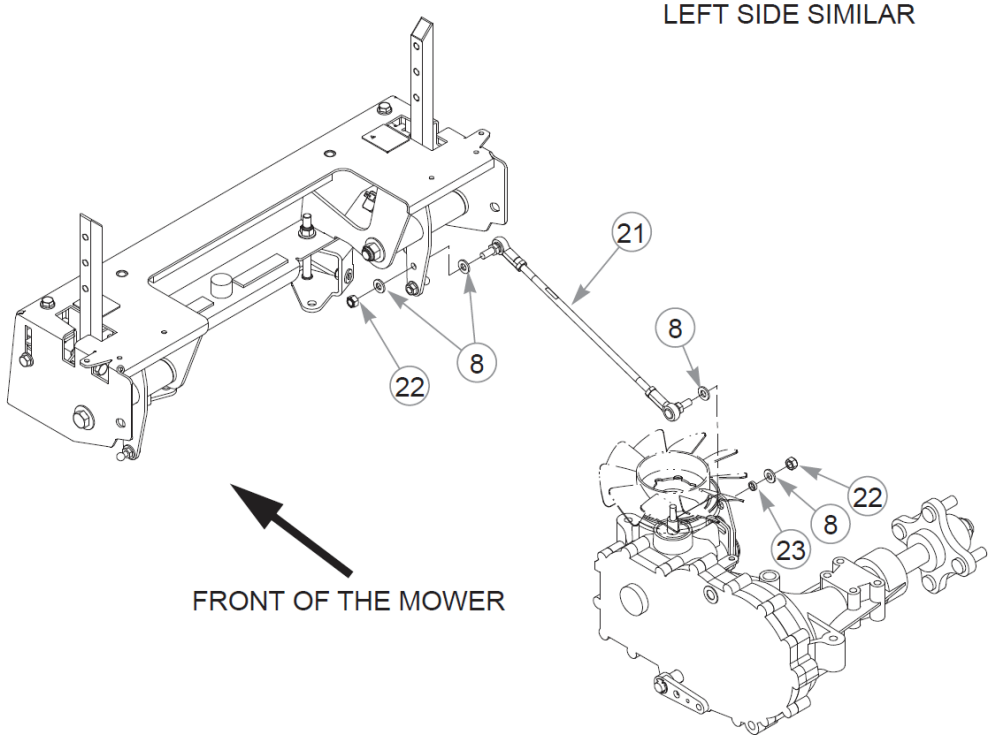

Comments for Page: Steering & Brake (Multi-Page)

1. The steering bars include the grips.2. Part of the transmission.

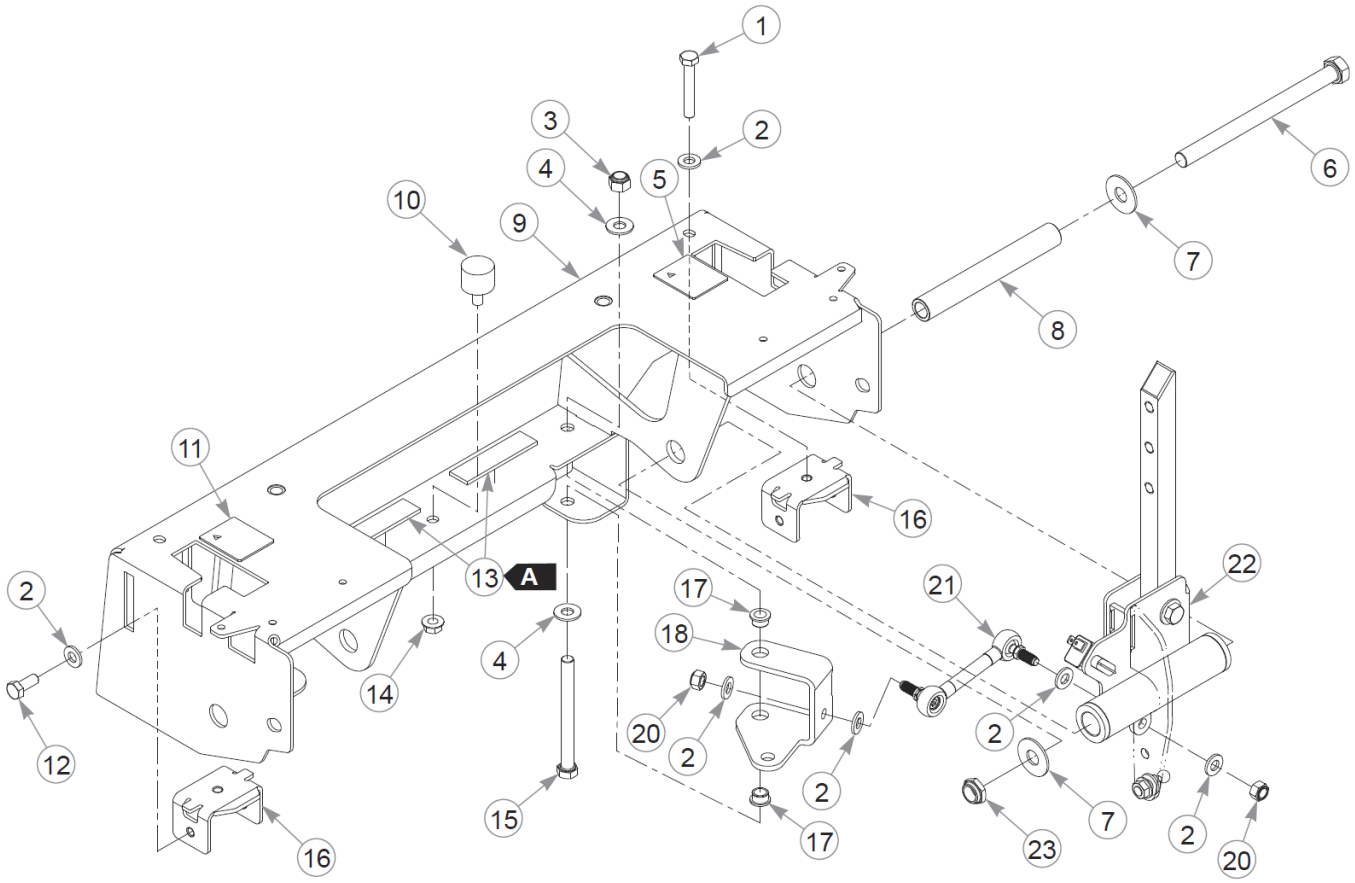

RIGHT SIDE SHOWN
LEFT SIDE SIMILAR

Item	Part No.	Qty	Name
1	064345	2	CS .312-18X2.000HXG5
2	768523	12	FW 0.343SAE
3	086660	2	NT .375-16NLG8
4	767954	4	FW 0.379X.82X.06 HD ZN
5	785220	1	DECAL, STEERING R.S.
6	042630	2	CS .500-13X6.500HXG5
7	704759	4	FW 0.500X1.25X.08 ZN
8	119811	2	SPACER, STEERING
9	552852	1	STEERING BOX (W/DECALS)
10	605542	1	ISOLATOR
11	785139	1	DECAL, STEERING L.S.
12	034280	2	CS .312-18X0.750HXG5
13	033035	6"	WEATHERSTRIP .12X.75
14	016832	1	NT .312-18FLKG5
15	725796	2	CS .375-16X4.000HXG5
16	605518	2	STOP, STEERING
17	765339	4	BUSHING,IGUS#0608 (FS)
18	124353-1	1	BRAKE BELL CRANK, RS
19	124362-1	1	BRAKE BELL CRANK, LS
20	058776	4	NT .312-18NLG5
21	604179	2	BRAKE LINK
22	N/A	1	STEERING BOX ASSEMBLY
23	707398	2	NT .500-13 JAM NY LK

Comments for Page: Steering Assembly Breakdown

WEATHERSTRIP LENGTHS:

A: 3"

1. 552852 (steering cover) includes decals.

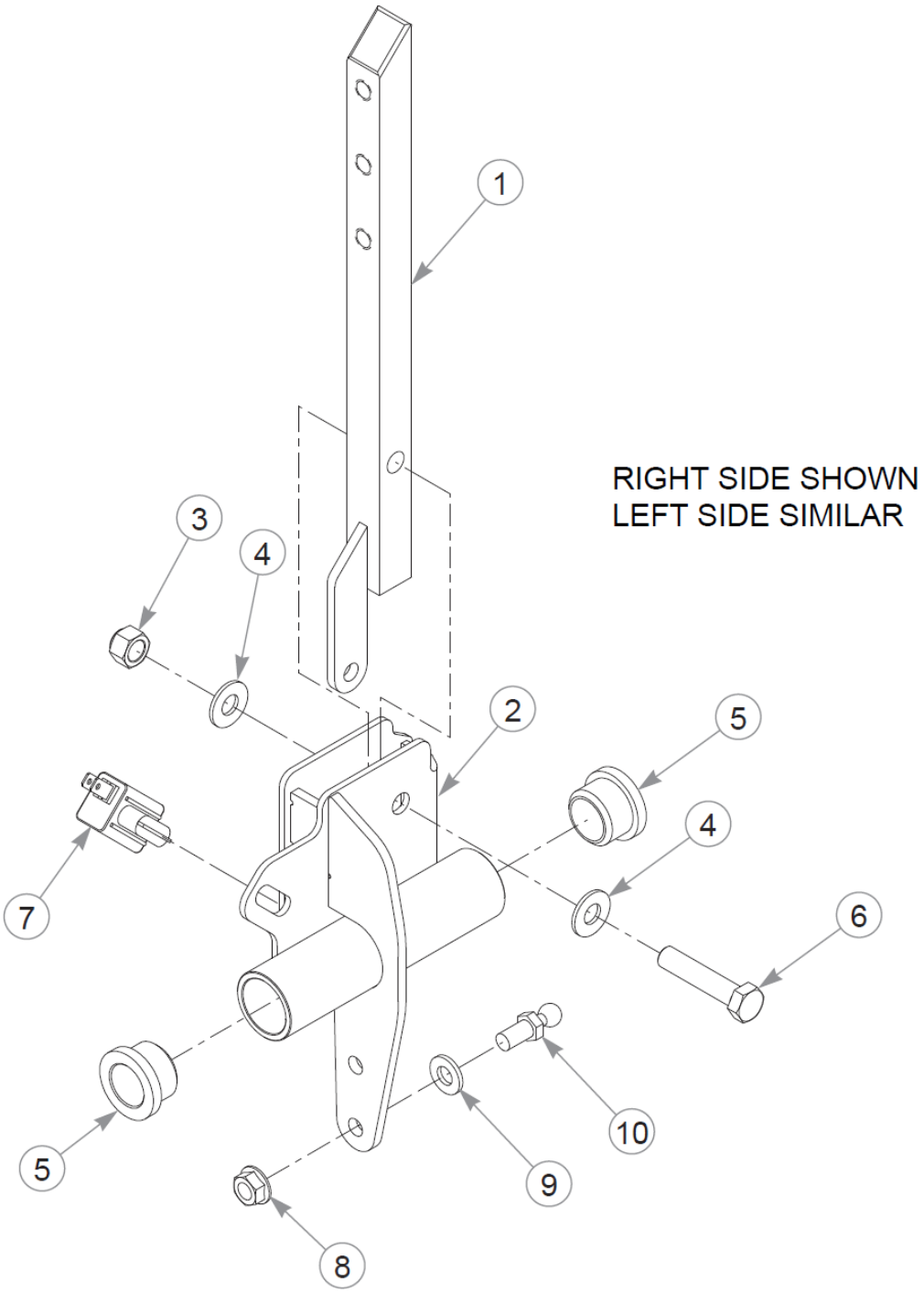
RIGHT SIDE SHOWN
LEFT SIDE SIMILAR
1
2
3
4
5
6
7
8
9
10

Item	Part No.	Qty	Name
1	119807	1	STEER LEVER W/A
2	119750	1	STEER PIVOT W/A, RS
Not Shown	119749	1	STEER PIVOT W/A, LS
3	086660	1	NT .375-16NLG8
4	767954	2	FW 0.379X.82X.06 HD ZN
5	781153	2	BUSHING, UHMW
6	705178	1	CS .375-16X1.750HXG5
7	601087	1	SWITCH, PLUNGER N.O.
8	016832	1	NT .312-18FLKG5
9	768523	1	FW 0.343SAE
10	781922	1	BALL STUD

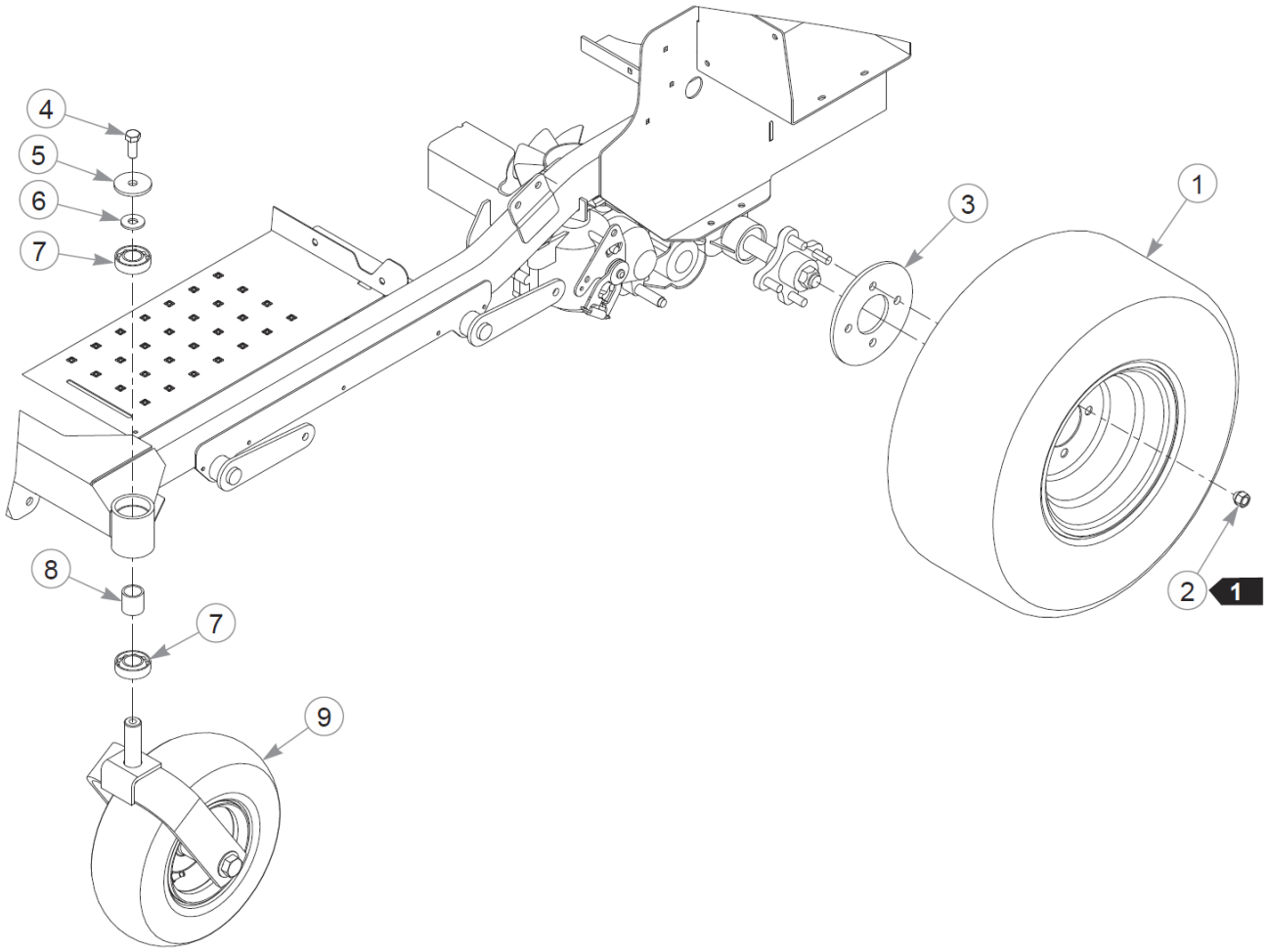
4
5
6
7
8
7
9
3
1
2
1

Item	Part No.	Qty	Name
1	605484	2	TIR/WHL 22X9.50-10 SLV
2	061077	8	WHEEL NUT
3	111875-3	2	BACKUP PLATE, WHEEL
4	705954	2	CS .500-13X1.25 HX G5 ZN
5	344267	2	FW .510X2.15X.19 ZN
6	712976	2	FW 0.531X1.38X.12 ZN
7	784223	4	BEARING
8	784603	2	SPACER
9	N/A	1	FRONT TIRE ASSEMBLY

Comments for Page: Wheel & Tire - 48" Mowers

1. Torque to 65–75 ft-lbs.

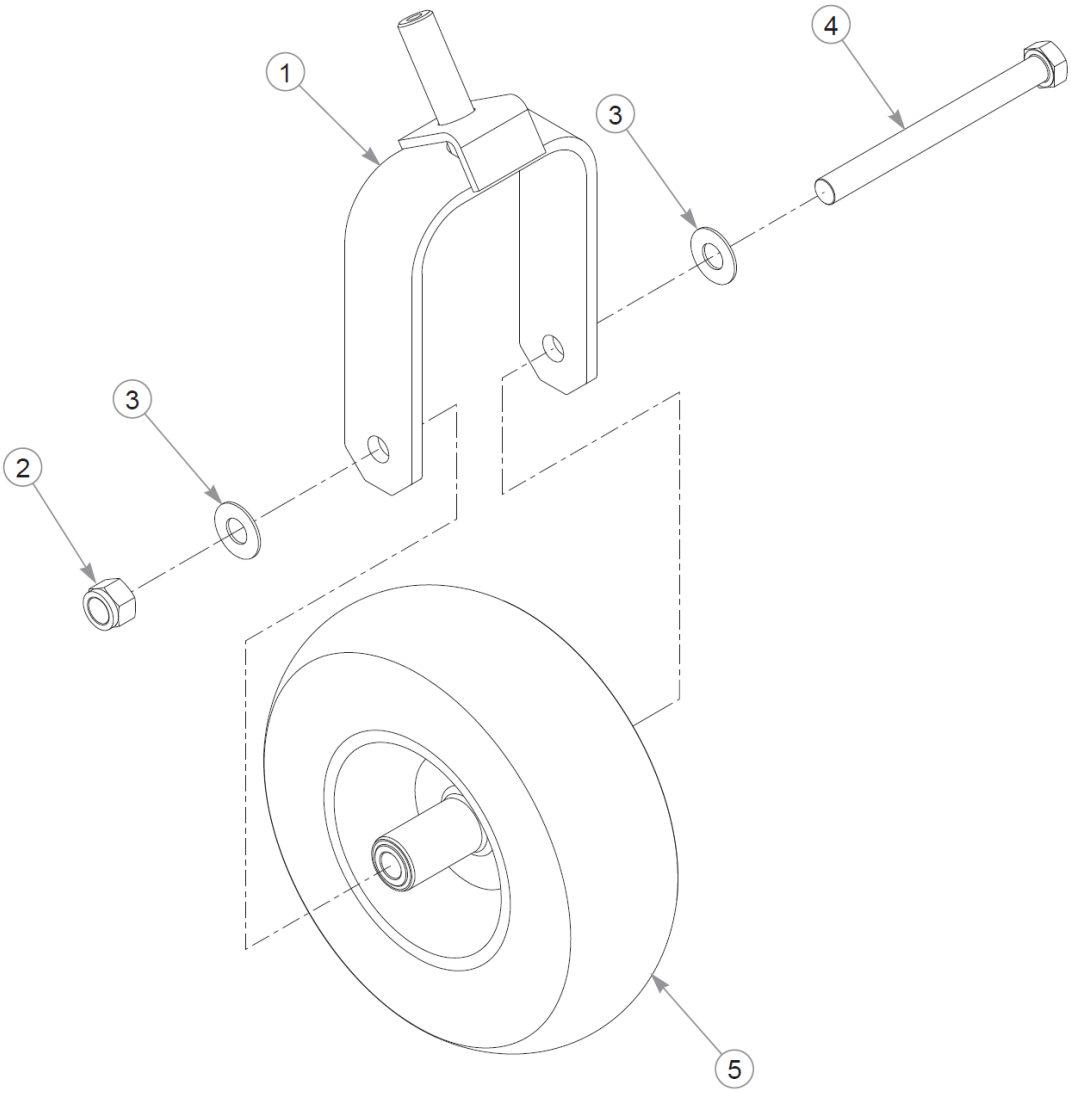
1
2
3
3
4
5

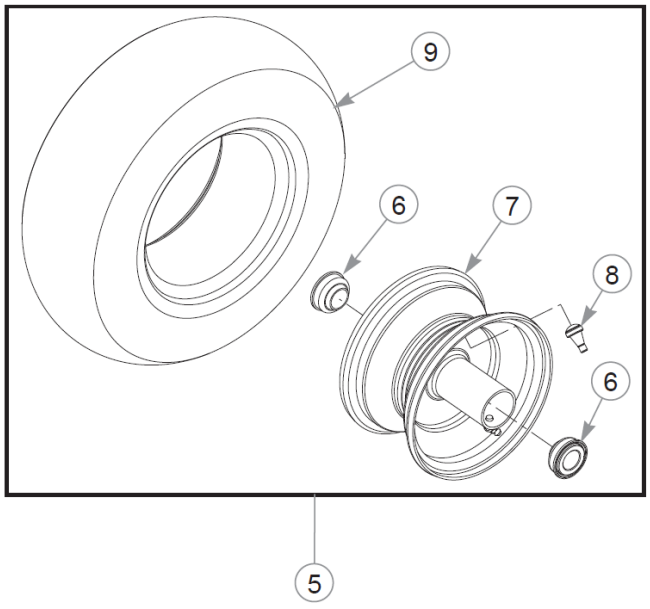
5
6
6
7
8
9

Item	Part No.	Qty	Name
1	366625	1	FORK W/A
2	061101	1	NT .750-10 HX ZN NL GR B
3	025296	2	FW .760X1.63X0.08 ZN
4	786731	1	CS .750-10X8.000HXG5
5	605038	1	TIR/WHL 13X5.00-6 SLV
6	786103	2	WHEEL BEARING
7	786079	1	WHL 6X3.25 SLV
8	019521	1	TIRE VALVE TR-412 GOODY
9	605039	1	TIR 13X5.00-6 B4R SMTH

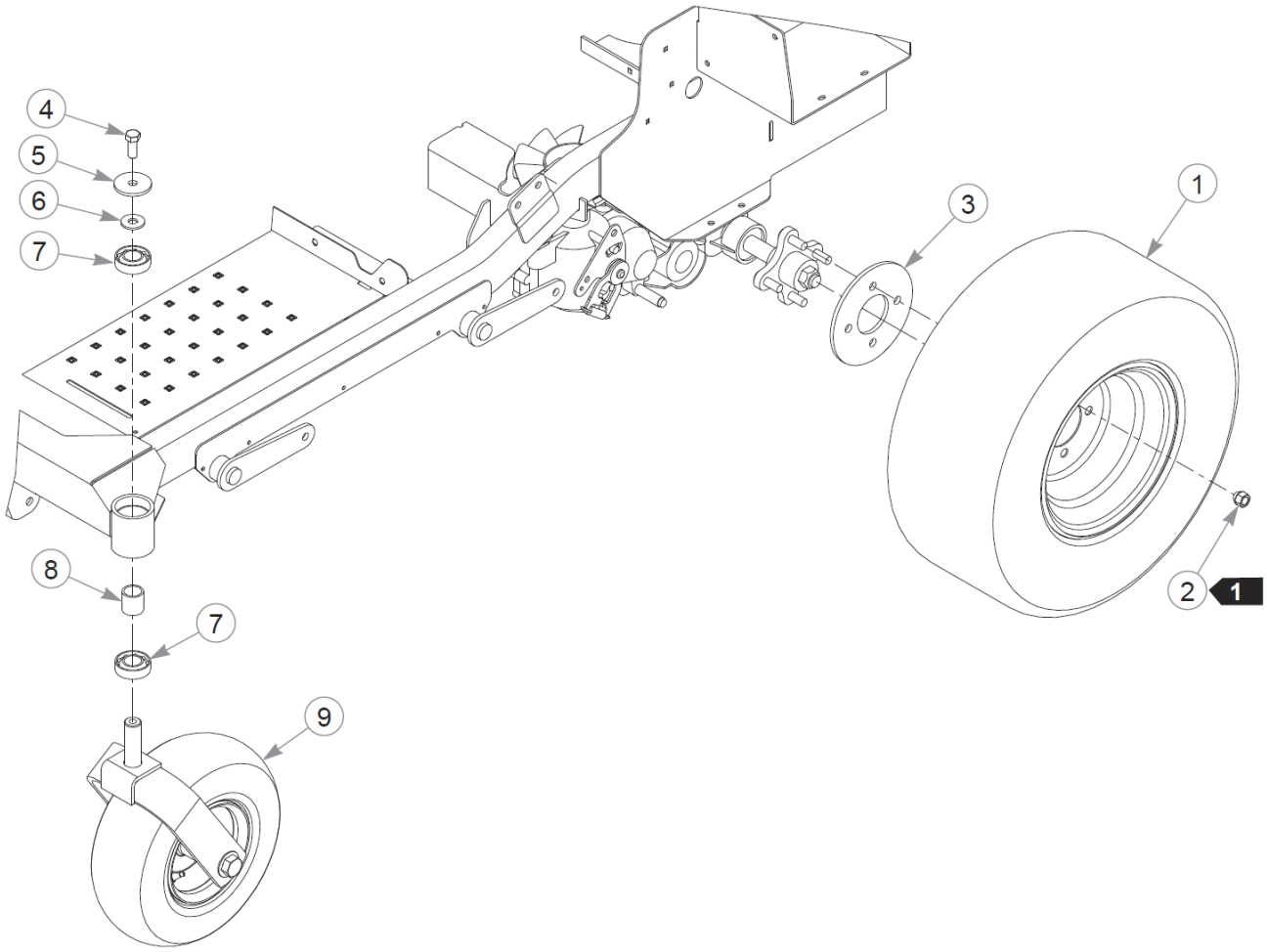
4
5
6
7
8
7
9
3
1
2
1

Item	Part No.	Qty	Name
1	605728	2	TIR/WHL 23X11.00-10 SLV
2	061077	8	WHEEL NUT
3	111875-3	2	BACKUP PLATE, WHEEL
4	705954	2	CS .500-13X1.25 HX G5 ZN
5	344267	2	FW .510X2.15X.19 ZN
6	712976	2	FW 0.531X1.38X.12 ZN
7	784223	4	BEARING
8	784603	2	SPACER
9	N/A	1	FRONT TIRE ASSEMBLY

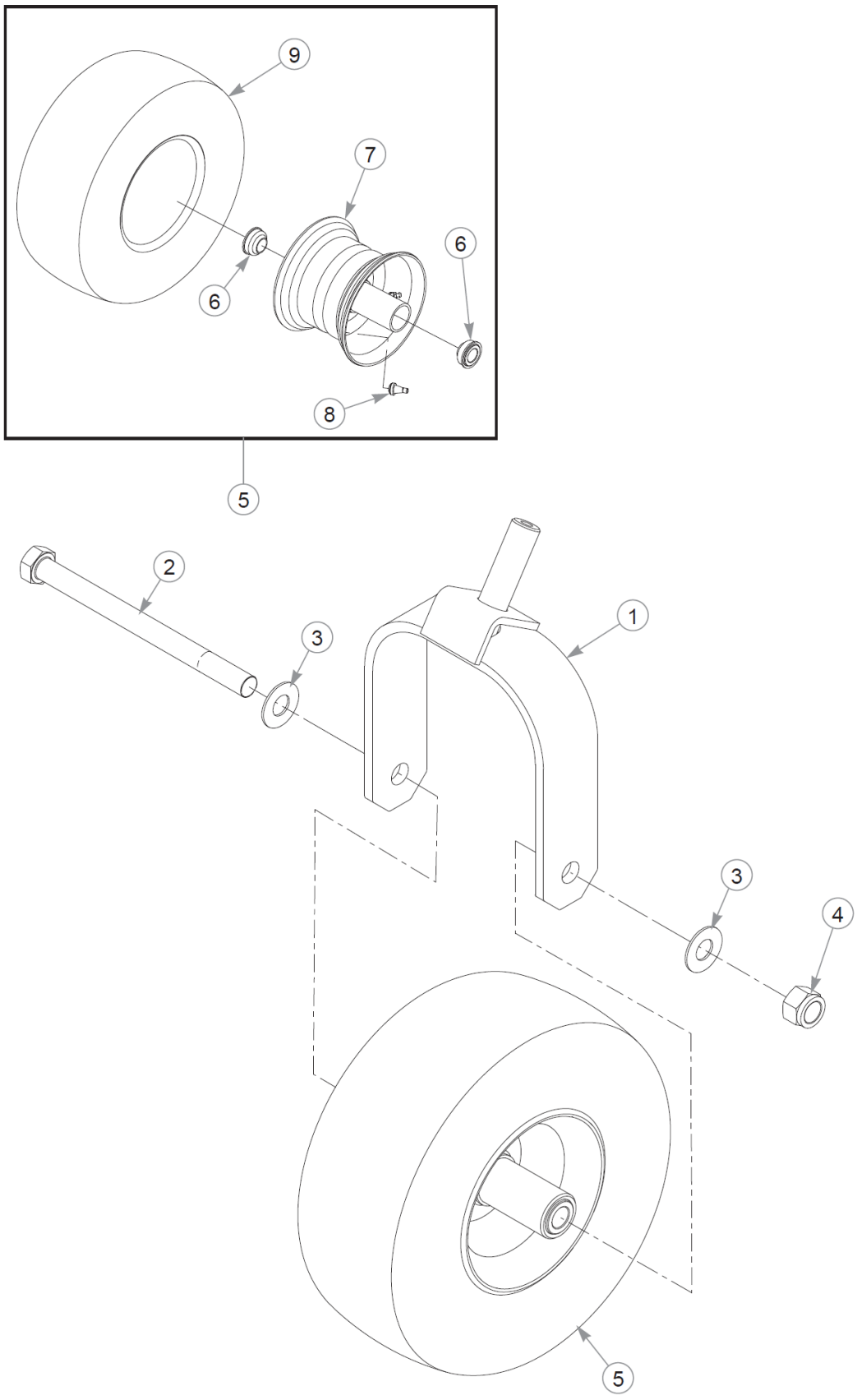
9
7
6
6
8
5
2
3
1
3
4
5

Item	Part No.	Qty	Name
1	604691	1	FORK W/A
2	041475	1	CS .750-10X9.50 HX G5 ZN
3	025296	2	FW .760X1.63X0.08 ZN
4	061101	1	NT .750-10 HX ZN NL GR B
5	605197	1	TIR/WHL 13X6.50-6 SLV
6	786103	2	WHEEL BEARING
7	605198	1	WHL 6X4.50 SLV
8	019521	1	TIRE VALVE TR-412 GOODY
9	604843	1	TIR 13X6.50-6 B4R SMTH

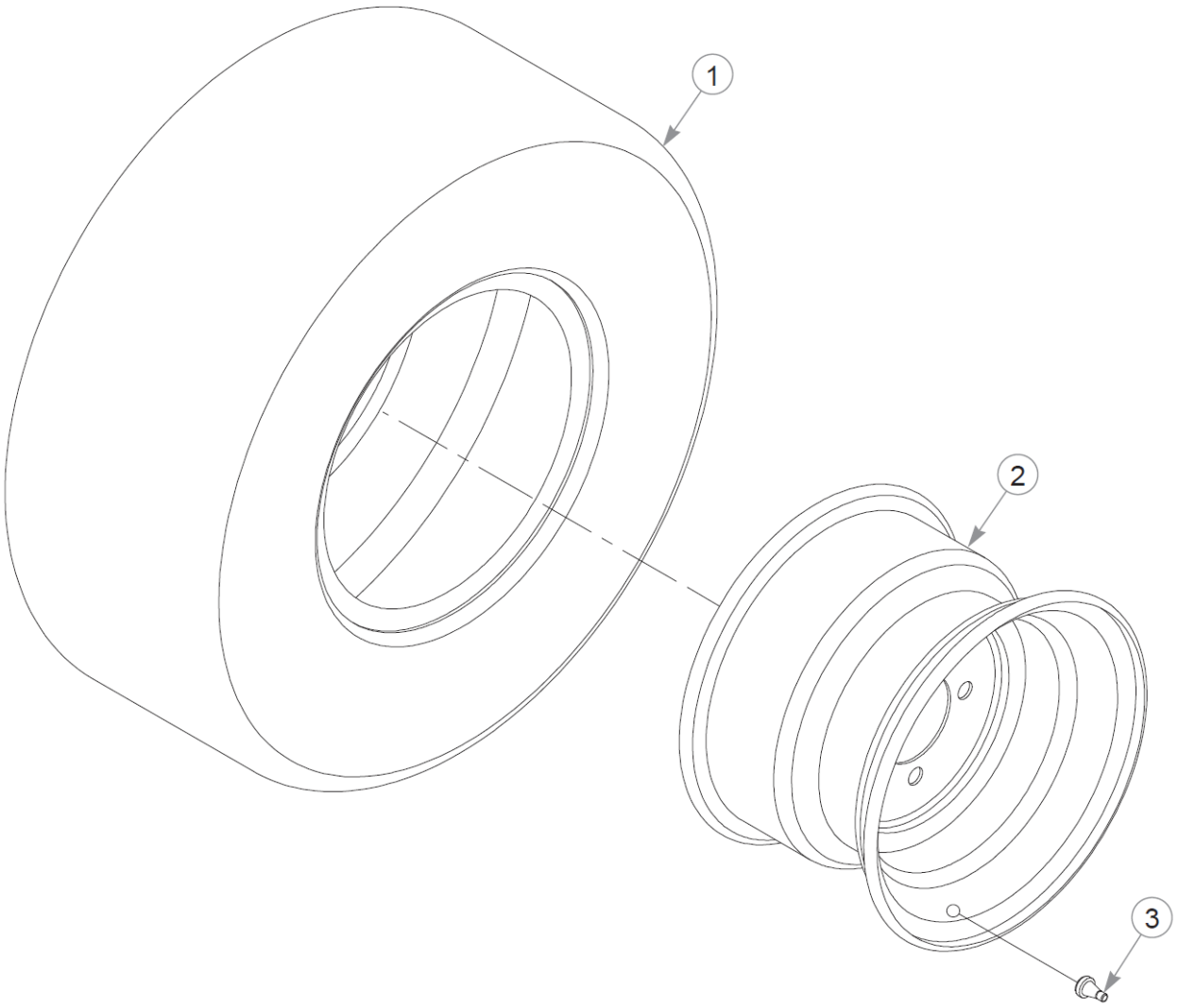
1
2
3

Item	Part No.	Qty	Name
1	605485	1	TIR 22X9.50-10 B4R LTFT
2	600700	1	WHL 10X7.00 4X4.0 SLV
3	019521	1	TIRE VALVE TR-412 GOODY

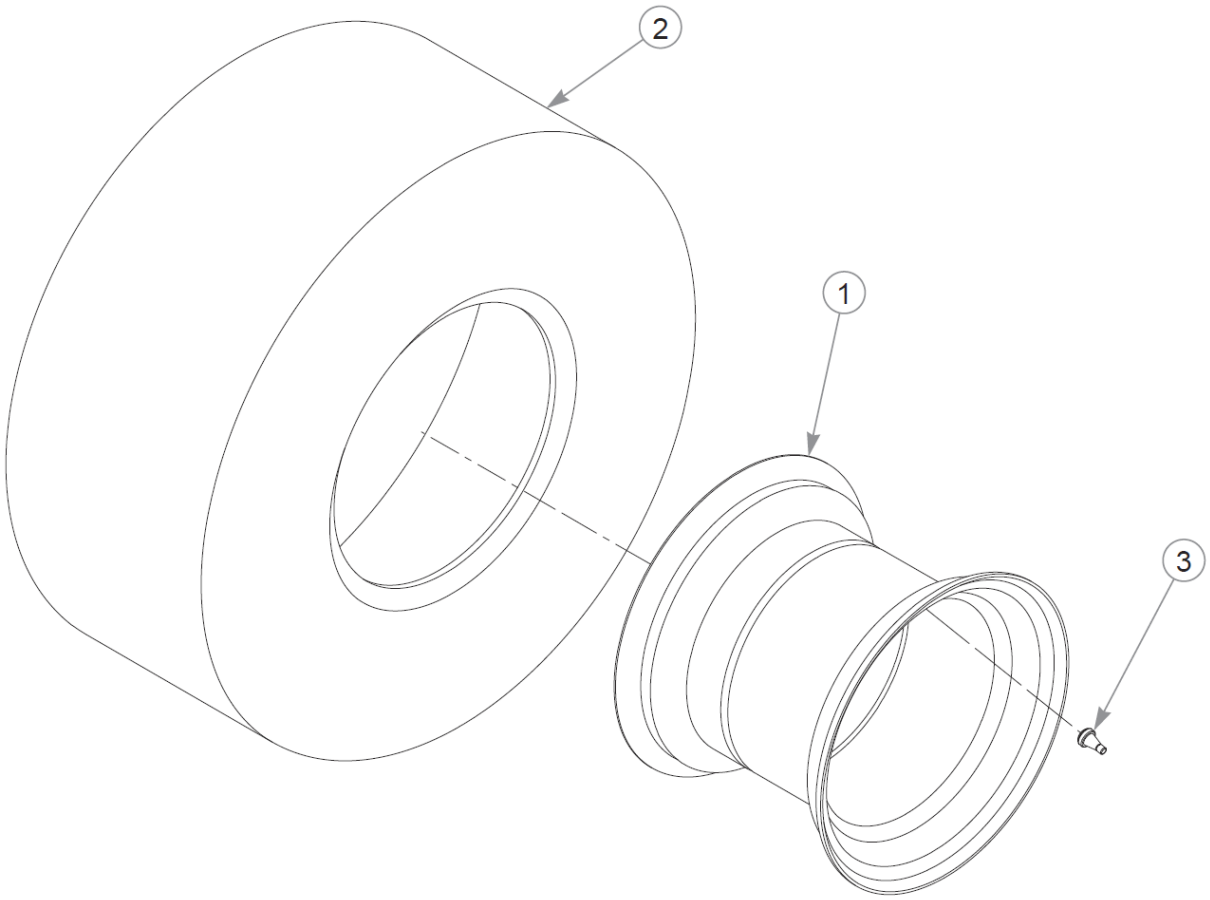
2
1
3

Item	Part No.	Qty	Name
1	601347	1	WHL 10X8.50 4X4.0 SLV
2	605727	1	TIR 23X11.00-10 B4R LTFT
3	019521	1	TIRE VALVE TR-412 GOODY

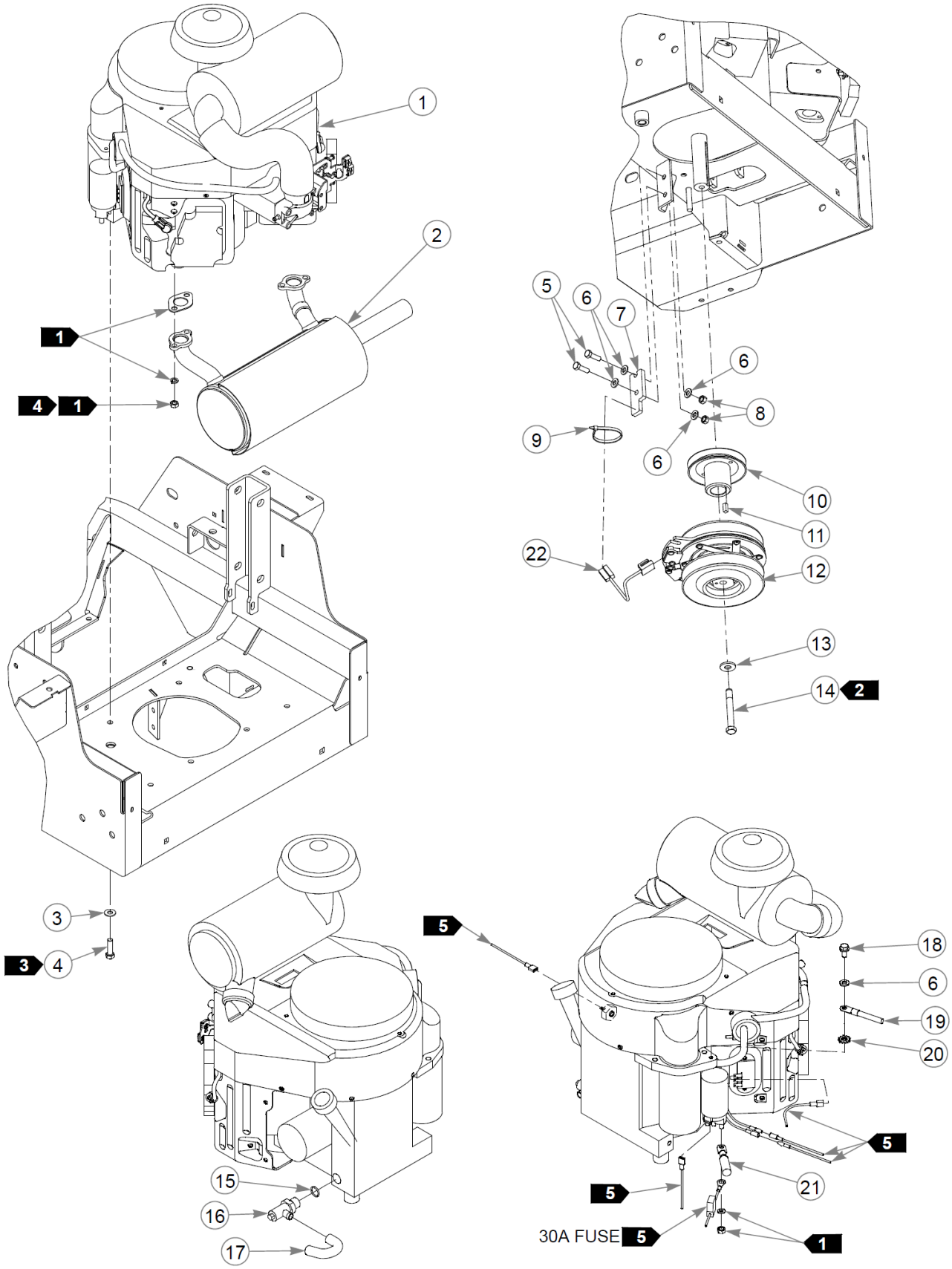
1
2
1
4 1
3
3 4
15
16
17
5
6
7
6
8
9
6
10
11
22
12
13
14 2
5
18
6
19
20
5
5
21
30A FUSE 5
1

Item	Part No.	Qty	Name
1		1	KAWASAKI FX691V ENGINE
Not Shown		1	KAWASAKI FX730V ENGINE
2	604250	1	MUFFLER
3	767954	4	FW 0.379X.82X.06 HD ZN
4	602580	4	CS .375-16X1.25HXG8ZYP85
5	036236	2	CS .312-18X1.000HXG5
6	768523	5	FW 0.343SAE
7	113946	1	CLUTCH ANCHOR
8	034272	2	NT .312-18HXG5
9	000331	4	WIRE TIE, SMALL/SHORT
10	605490	1	PULLEY, ENG 4.58OP
11	712372	1	KEY 1/4 SQ X 0.66 LG(FS)
12	121809K	1	CLUTCH KIT
13	602680	1	FW .453X1.12X.12 HRD ZN
14	601834	1	CS .437-20X3.25 HXG5 P85
15	604369	1	O-RING
16	604350	1	VALVE, OIL DRAIN
17	605317	1	HOSE, OIL DRAIN
18	720516	1	CS M8-1.25X16HX FL10.9
19	601841	1	BATTERY CABLE, NEG.
20	029876	1	LW .312 INTEXT ZN
21	785063	1	BATTERY CABLE, POSITIVE
22	791251	1	HARNESS, CLUTCH PIGTAIL

Comments for Part Num. 791251

Pigtail was updated with epoxy to hold the wires steady. The wire sheath was also updated to a more flexible material.

Comments for Page: Engine, Kawasaki

1. Supplied with the engine.2. Torque to 45–48 ft-lbs.3. Torque to 30–35 ft-lbs.4. Torque to 17 ft-lbs.5. Part of the wire harness.

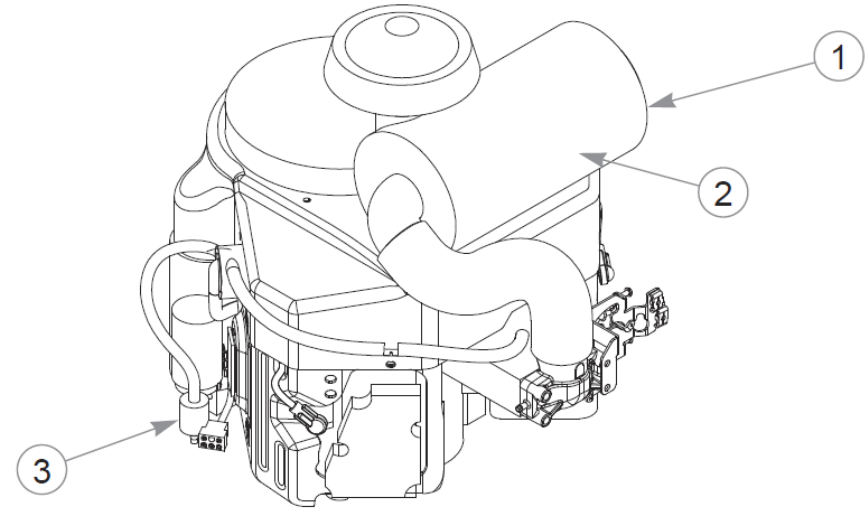
1
2
3

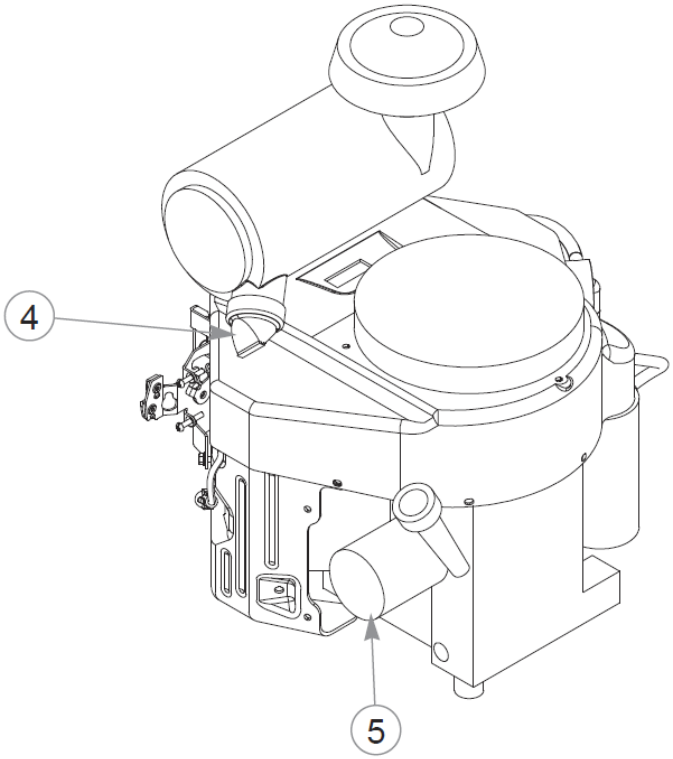
4
5

Item	Part No.	Qty	Name
1	785261	1	AIR FILTER - MAIN
2	785279	1	AIR FILTER - SAFETY
3	068478	1	FUEL FILTER - IN LINE
4	763318	1	VALVE, VACUATOR (SERV P
5	602581	1	ENGINE OIL FILTER
REF	603138	1	ENGINE OIL FILTER

Comments for Page: Engine Service Parts, Kawasaki

1. 602581 is used on FX691V & FX730V engines.

2. 603138 is used on FX850V engine.

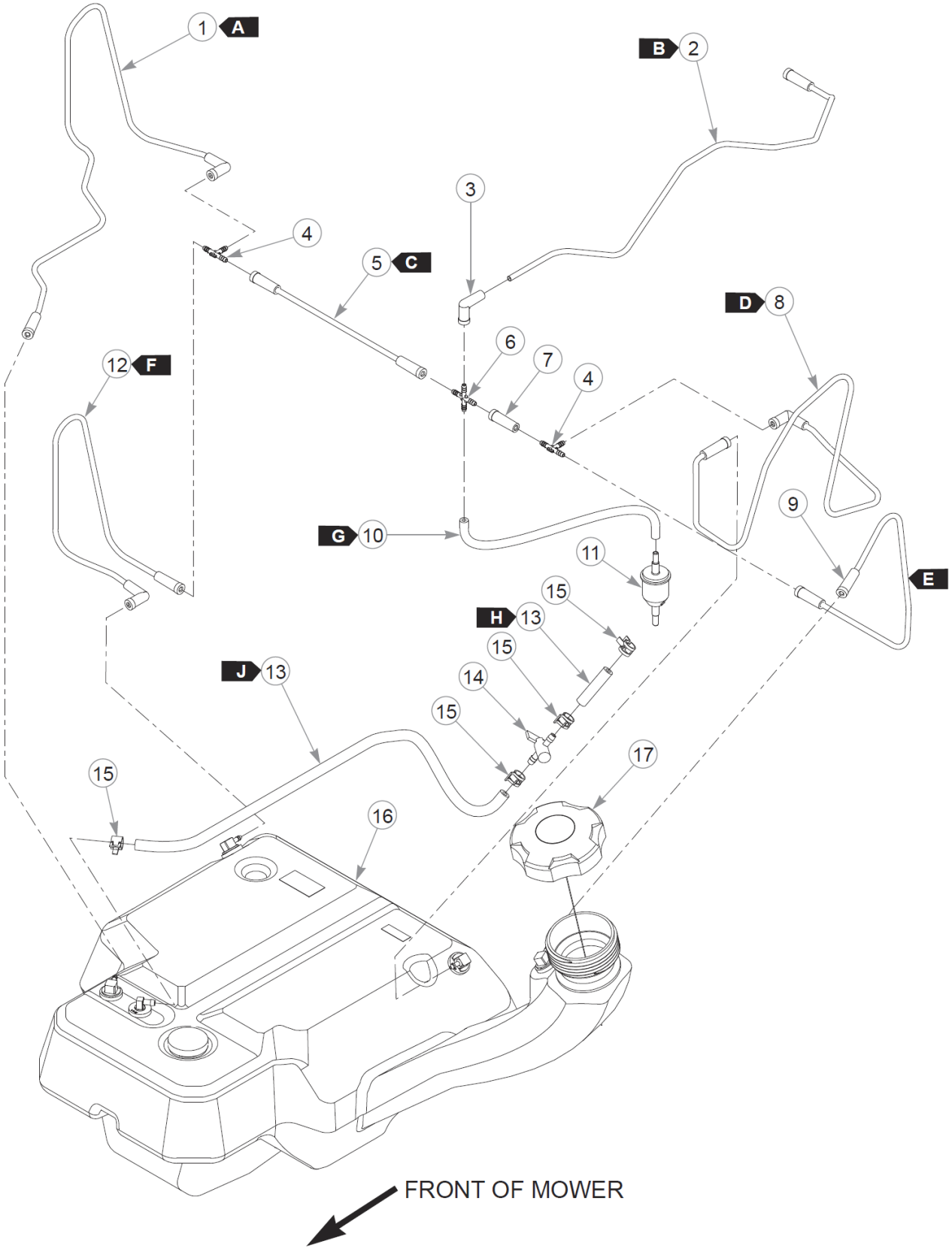
1 A
B 2
3
4
5 C
D 8
6
7
4
12 F
G 10
11
9
E
15
H 13
15
J 13
14
15
17
15
16
FRONT OF MOWER

Item	Part No.	Qty	Name
1	605491	1	VAPOR LINE, 3/16 FORMED
2	605493	1	VAPOR LINE, 3/16 FORMED
3	605565	1	BOOT, 3/16 TO 3/16
4	605690	2	TEE, 3/16" PLASTIC
5	605535	1	VAPOR LINE, 3/16 FORMED
6	605425	1	CROSS, 3/16" PLASTIC
7	605564	1	BOOT, 3/16 TO 3/16
8	605534	1	VAPOR LINE, 3/16 FORMED
9	605492	1	VAPOR LINE, 3/16 FORMED
10	603326	11.50"	VAPOR LINE, 3/16"
Comments for Part Num. 603326 Sold by the foot.			
11	604323	1	FILTER, VAPOR SYSTEM
12	605533	1	VAPOR LINE, 3/16 FORMED
13	015818	23"	FUEL LINE, 1/4"
Comments for Part Num. 015818 Sold by the foot.			
14	605601	1	FUEL SHUT-OFF VALVE
15	000323	4	CLIP, HOSE CLAMP
16	606581	1	FUEL TANK
Comments for Part Num. 606581 **IMPORTANT** Before replacing Fuel Tank, refer to Service Bulletin 550.			
17	603807	1	CAP, 3.5" RATCHETING GAS
18	000331	8	WIRE TIE, SMALL/SHORT
19	602725	1	WIRE TIE,
20	604307	3	MOUNT, PUSH BUTTON
21	047456	1	GM .750X.188X1.00X.12
22	080358	1	GM .50X1.00X.75X.12
23	601503	4	CB .250-20 X .625 ZN
24	706531	2	GM 1.12X1.75X1.37X.12
25	016816	4	NT .250-20FLKG5
26	043570	2	CLIP - HOSE - SINGLE(FS)

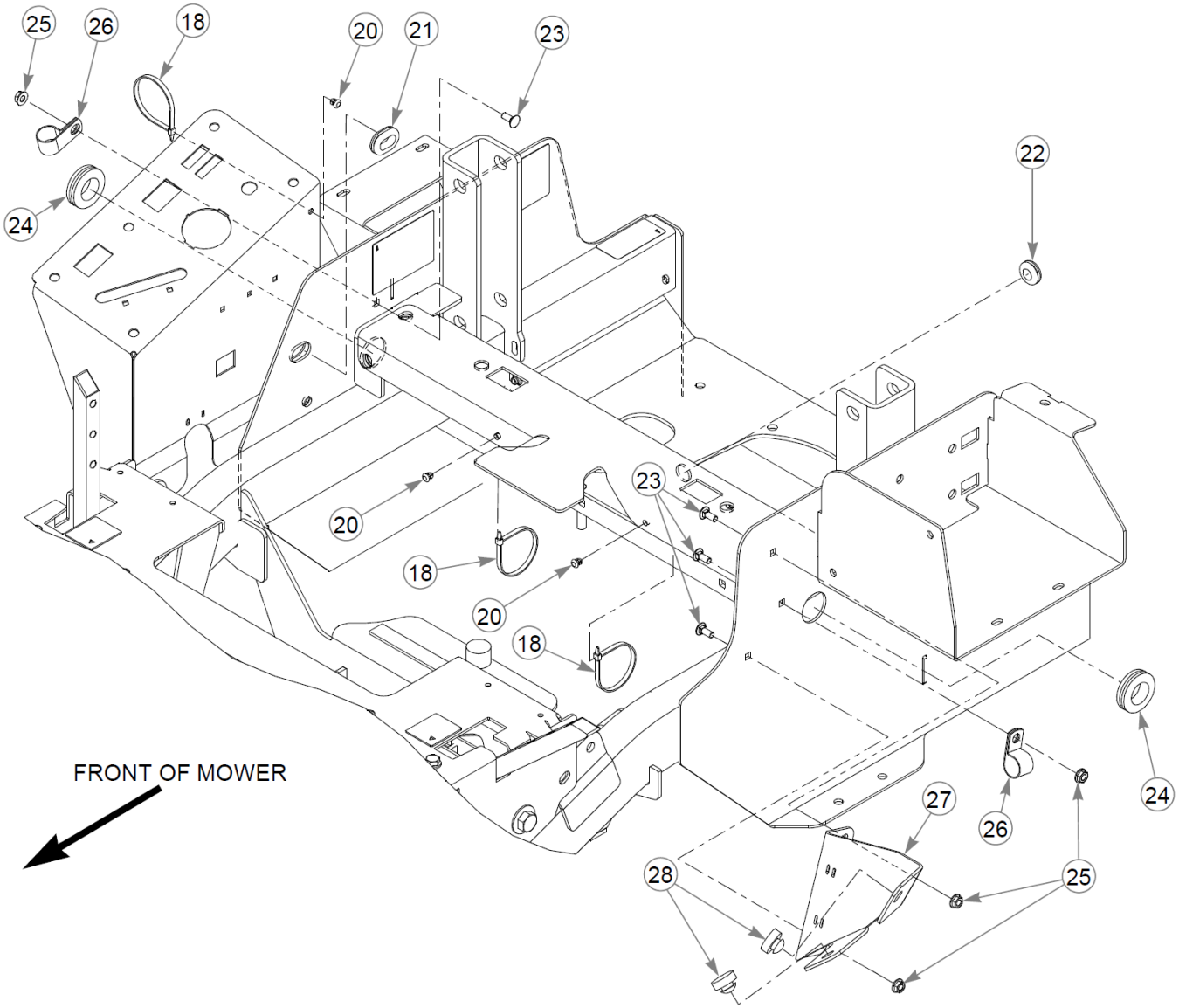
25
26
18
20
21
23
24
22
20
23
18
20
18
FRONT OF MOWER
24
27
26
28
25

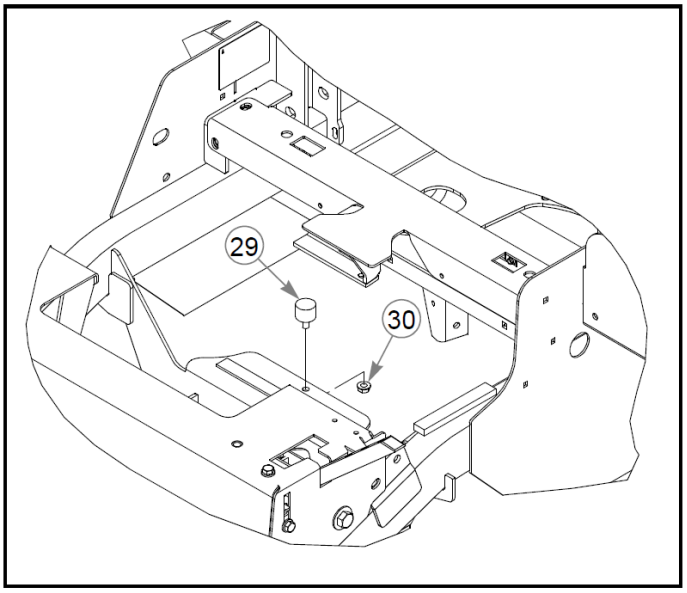
29
30

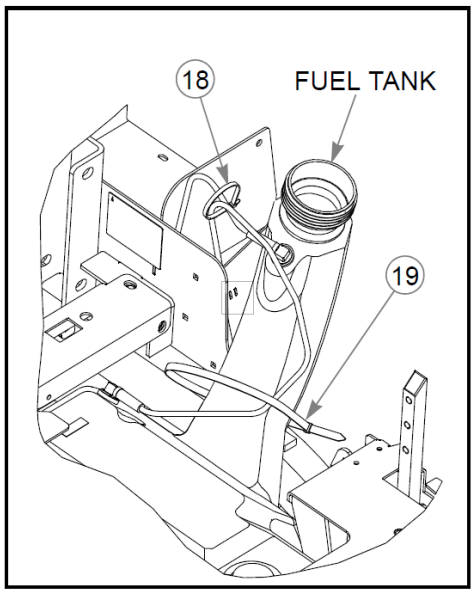
18
FUEL TANK
19

Item	Part No.	Qty	Name
27	124348-3	1	TANK NECK SUPPORT
28	781880	2	BUMPER, .500x 1.00x .31
29	605542	1	ISOLATOR
30	016832	1	NT .312-18FLKG5
31	000430	1	WIRE TIE, SMALL/LONG

Comments for Page: Fuel System, Kawasaki - Without Carbon Canister (Multi-Page)

FUEL & VAPOR LINE LENGTHS

A— FRONT RIGHT SIDE PORT TO TEE (VAPOR)

B— ENGINE TO CROSS (VAPOR)

C— TEE TO CROSS (VAPOR)

D— LEFT BACK PORT TO TEE (VAPOR)

E— FILLER NECK PORT TO TEE (VAPOR)

F— RIGHT BACK PORT TO TEE (VAPOR)

G—11.50" CROSS TO FILTER (VAPOR)

H—2" —VALVE TO ENGINE (FUEL)

J—21"— TANK TO VALVE (FUEL)

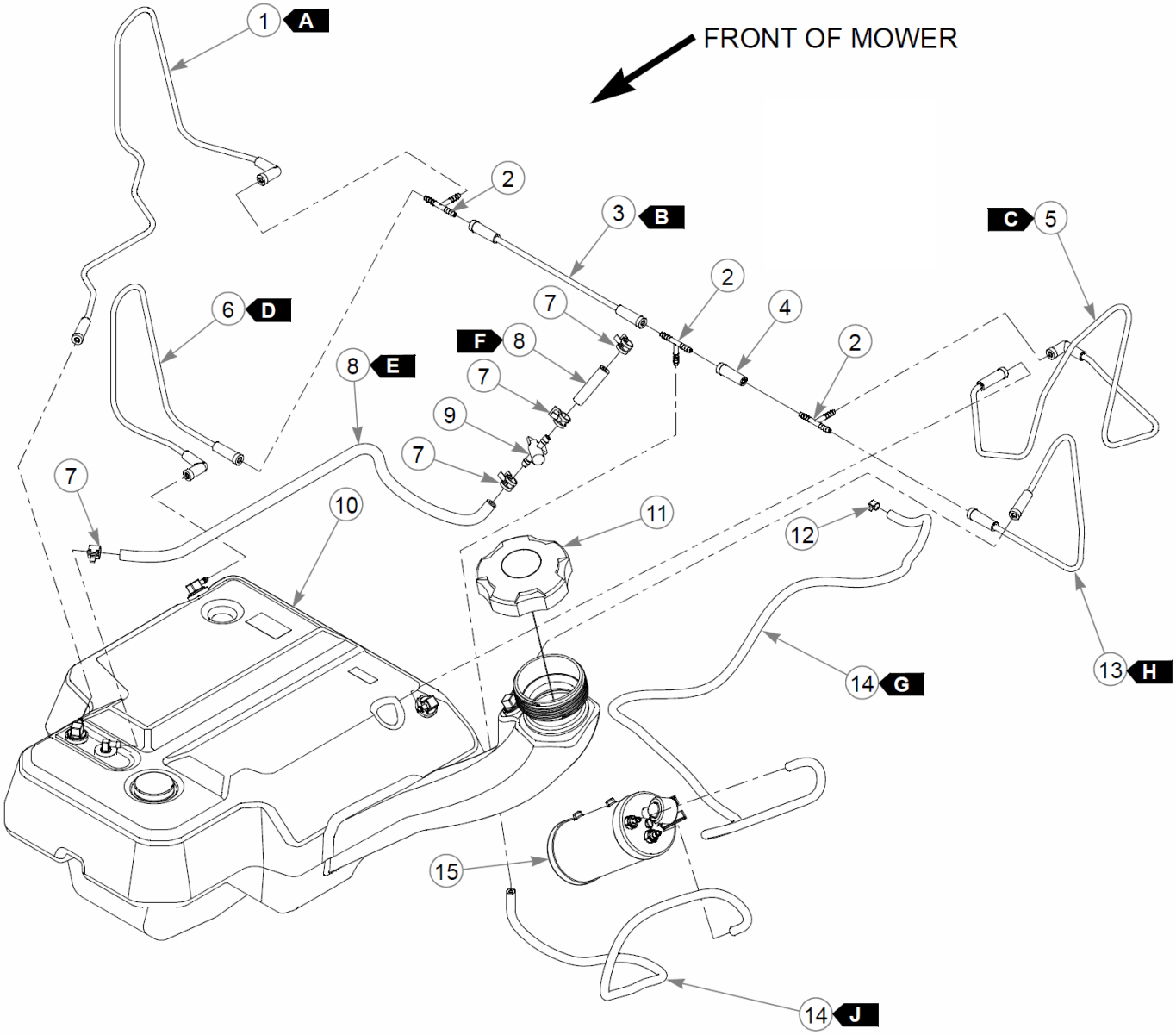
FRONT OF MOWER
1 A
2
3 B
C 5
6 D
7
F 8
2
4
2
8 E
7
9
7
7
10
11
12
13 H
14 G
15
14 J

Item	Part No.	Qty	Name
1	605491	1	VAPOR LINE, 3/16 FORMED
2	605690	3	TEE, 3/16" PLASTIC
3	605535	1	VAPOR LINE, 3/16 FORMED
4	605564	1	BOOT, 3/16 TO 3/16
5	605534	1	VAPOR LINE, 3/16 FORMED
6	605533	1	VAPOR LINE, 3/16 FORMED
7	000323	4	CLIP, HOSE CLAMP
8	015818	23"	FUEL LINE, 1/4"
Comments for Part Num. 015818 Sold by the foot.			
9	605601	1	FUEL SHUT-OFF VALVE
10	606581	1	FUEL TANK
Comments for Part Num. 606581 **IMPORTANT** Before replacing Fuel Tank, refer to Service Bulletin 550.			
11	603807	1	CAP, 3.5" RATCHETING GAS
12	603112	1	CLAMP, 3/16 FUEL
13	605492	1	VAPOR LINE, 3/16 FORMED
14	603326	84.5"	VAPOR LINE, 3/16"
Comments for Part Num. 603326 Sold by the foot.			
15	605506	1	CARBON CANISTER
16	000331	9	WIRE TIE, SMALL/SHORT
17	604307	3	MOUNT, PUSH BUTTON
18	601503	4	CB .250-20 X .625 ZN
19	047456	1	GM .750X.188X1.00X.12
20	016816	4	NT .250-20FLKG5
21	043570	2	CLIP - HOSE - SINGLE(FS)
22	706531	2	GM 1.12X1.75X1.37X.12
23	603363	1	DECAL, ANSI COMPLIANCE
24	601908	1	DECAL, SPARK ARRESTOR
25	080358	1	GM .50X1.00X.75X.12
26	064006	2	CS .312-18X0.625HXG5

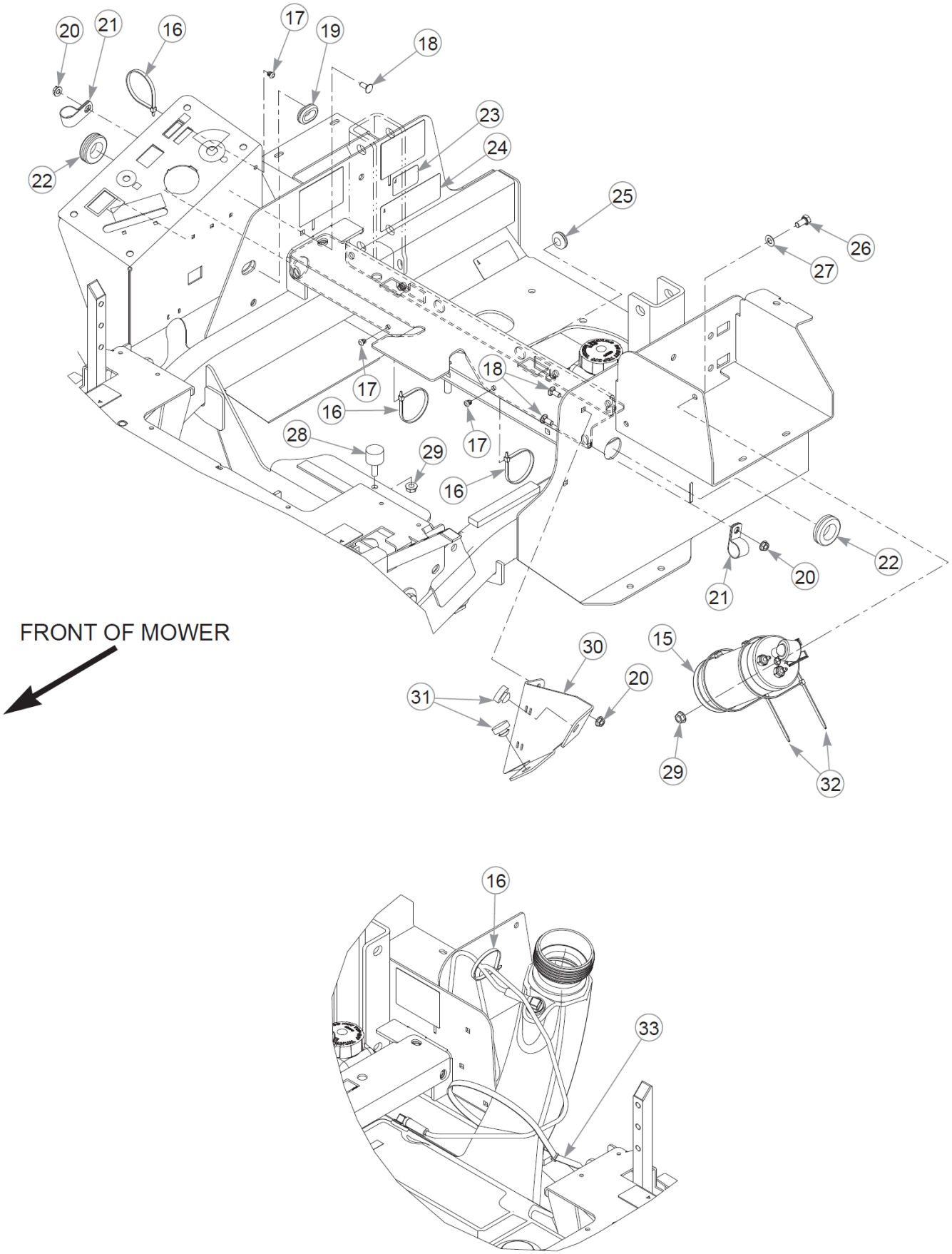
20
21
16
17
19
18
23
24
22
25
26
27
18
17
16
28
29
17
16
22
20
21
FRONT OF MOWER
30
20
31
15
29
32
16
33

Item	Part No.	Qty	Name
27	604252	2	FW .340X.68X.04 ZN
28	605542	1	ISOLATOR
29	016832	3	NT .312-18FLKG5
30	124348-3	1	TANK NECK SUPPORT
31	781880	2	BUMPER, .500x 1.00x .31
32	000430	3	WIRE TIE, SMALL/LONG
33	602725	1	WIRE TIE,

Comments for Page: Fuel System, Kawasaki - With Carbon Canister (Multi-Page)

FUEL & VAPOR LINE LENGTHS

A— FRONT RIGHT SIDE PORT TO TEE (VAPOR)

B— TEE TO TEE (VAPOR)

C— LEFT BACK PORT TO TEE (VAPOR)

D— RIGHT BACK PORT TO TEE (VAPOR)

E— 21" TANK TO VALVE (FUEL)

F— 2' VALVE TO ENGINE (FUEL)

G—54" ENGINE TO CARBON CANISTER (VAPOR)

H—FILLER NECK PORT TO TEE (VAPOR)

J—30.5" TEE TO CARBON CANISTER (VAPOR)

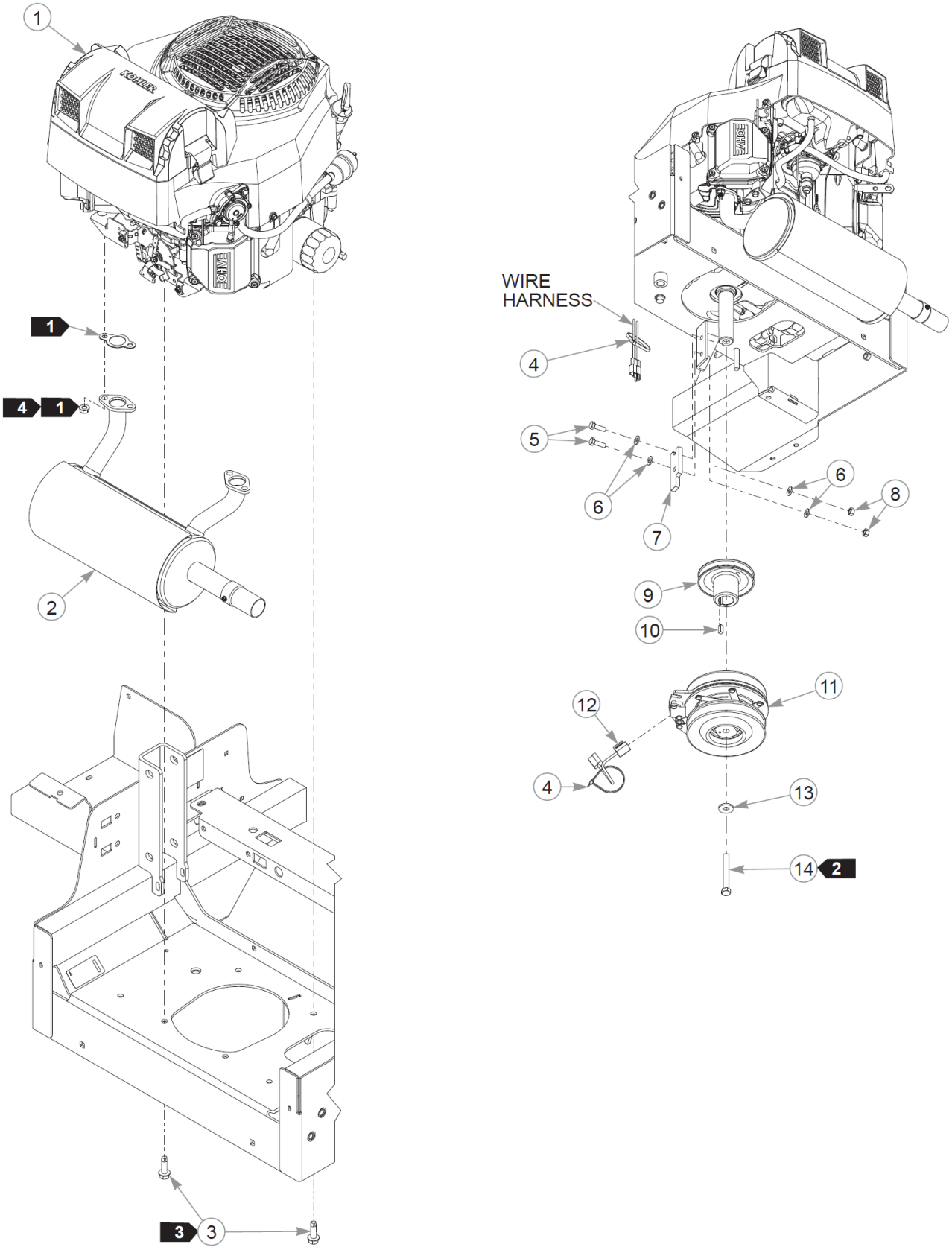
1
KOHLER
1
4
1
2
3
3
WIRE
HARNESS
4
5
6
7
6
8
9
10
11
12
4
13
14
2

Item	Part No.	Qty	Name
1		1	ENGINE, KOH ZT730
Not Shown		1	ENGINE, KOH ZT740
2	606405	1	MUFFLER, KOHLER
Not Shown	606468	1	EXTENSION, TAILPIPE
3	605814	4	SC0.375-16X1.250FLG
4	000331	3	WIRE TIE, SMALL/SHORT
5	036236	2	CS .312-18X1.000HXG5
6	768523	4	FW 0.343SAE
7	113946	1	CLUTCH ANCHOR
8	034272	2	NT .312-18HXG5
9	605490	1	PULLEY, ENG 4.58OP
10	712372	1	KEY 1/4 SQ X 0.66 LG(FS)
11	121809K	1	CLUTCH KIT
12	791251	1	HARNESS, CLUTCH PIGTAIL
Comments for Part Num. 791251 Pigtail was updated with epoxy to hold the wires steady. The wire sheath was also updated to a more flexible material.			
13	602680	1	FW .453X1.12X.12 HRD ZN
14	601834	1	CS .437-20X3.25 HXG5 P85
15	029868	1	LW .250 INTEXT ZN
16	601841	1	BATTERY CABLE, NEG.
17	768515	1	FW 0.281SAE
18	603617	1	CS .250-20X.50 HX FL STP
19	785063	1	BATTERY CABLE, POSITIVE

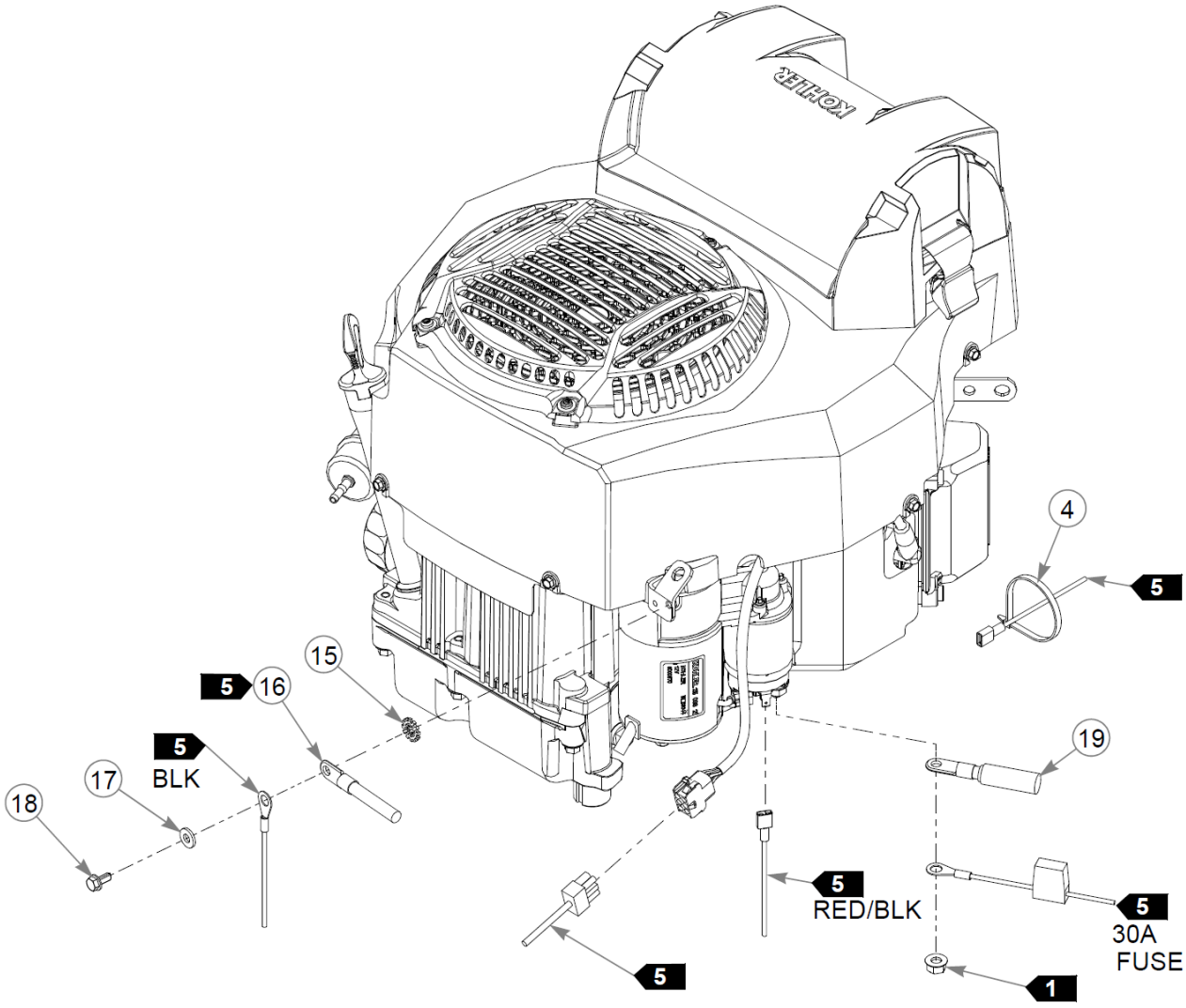
4
5
15
5
16
5
BLK
17
18
19
5
RED/BLK
5
30A
FUSE
5
1

Comments for Page: Engine, Kohler (Multi-Page)

1. Supplied with the engine.
2. Torque to 45–48 ft-lbs. Replace (do not reuse) the cap screw if it is removed or loosened. Use only hand tools to install this fastener.
3. Torque to 44 ft-lbs. Use only hand tools to install this fastener.
4. Torque to 18 ft-lbs.
5. Part of the wire harness.

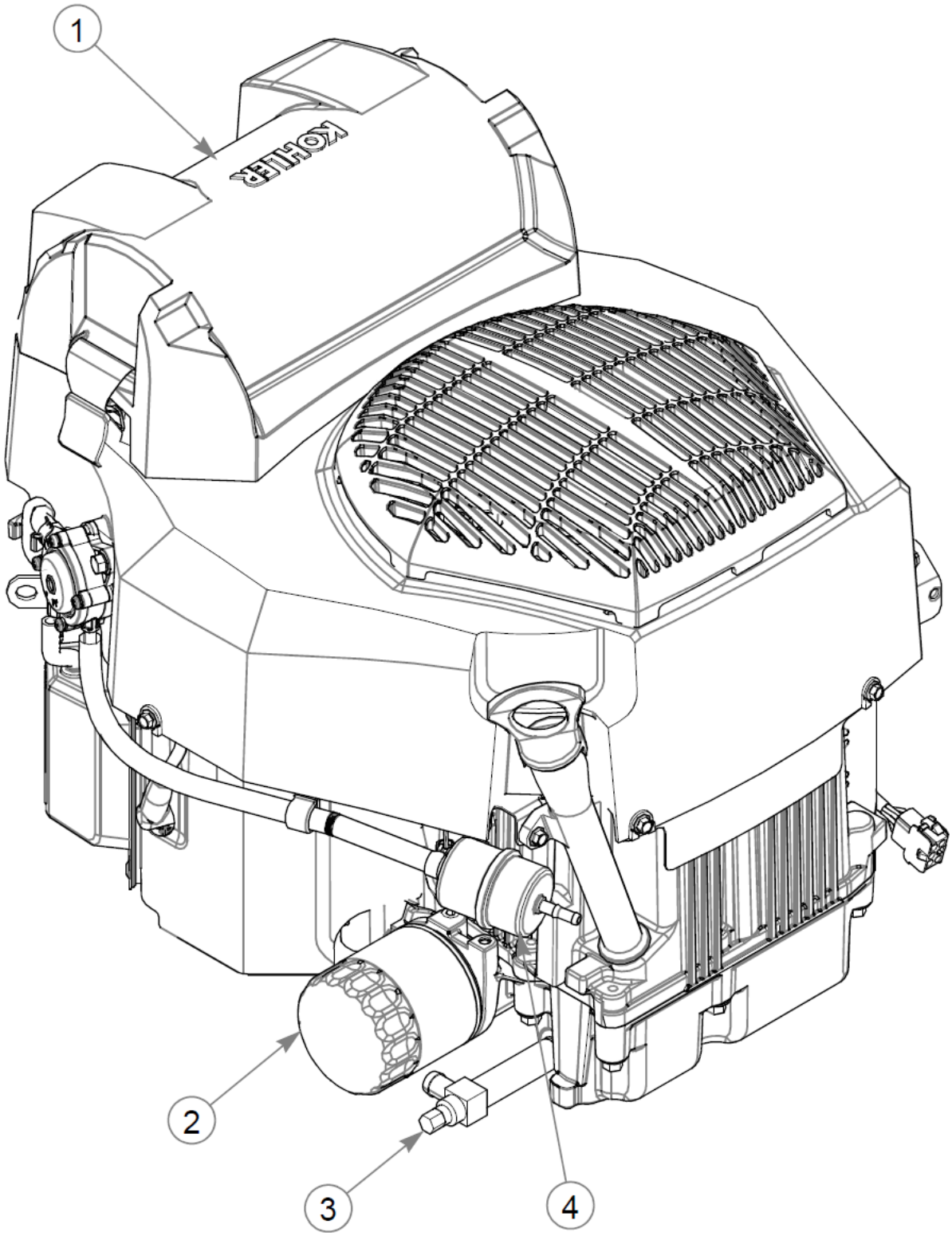
1
KOHLER
2
3
4

Item	Part No.	Qty	Name
1	606465	1	AIR FILTER - MAIN
2	606095	1	ENGINE OIL FILTER
3	796672	1	VALVE,OIL DRAIN 3/8-18
4	606228	1	FUEL FILTER, KOH ECV

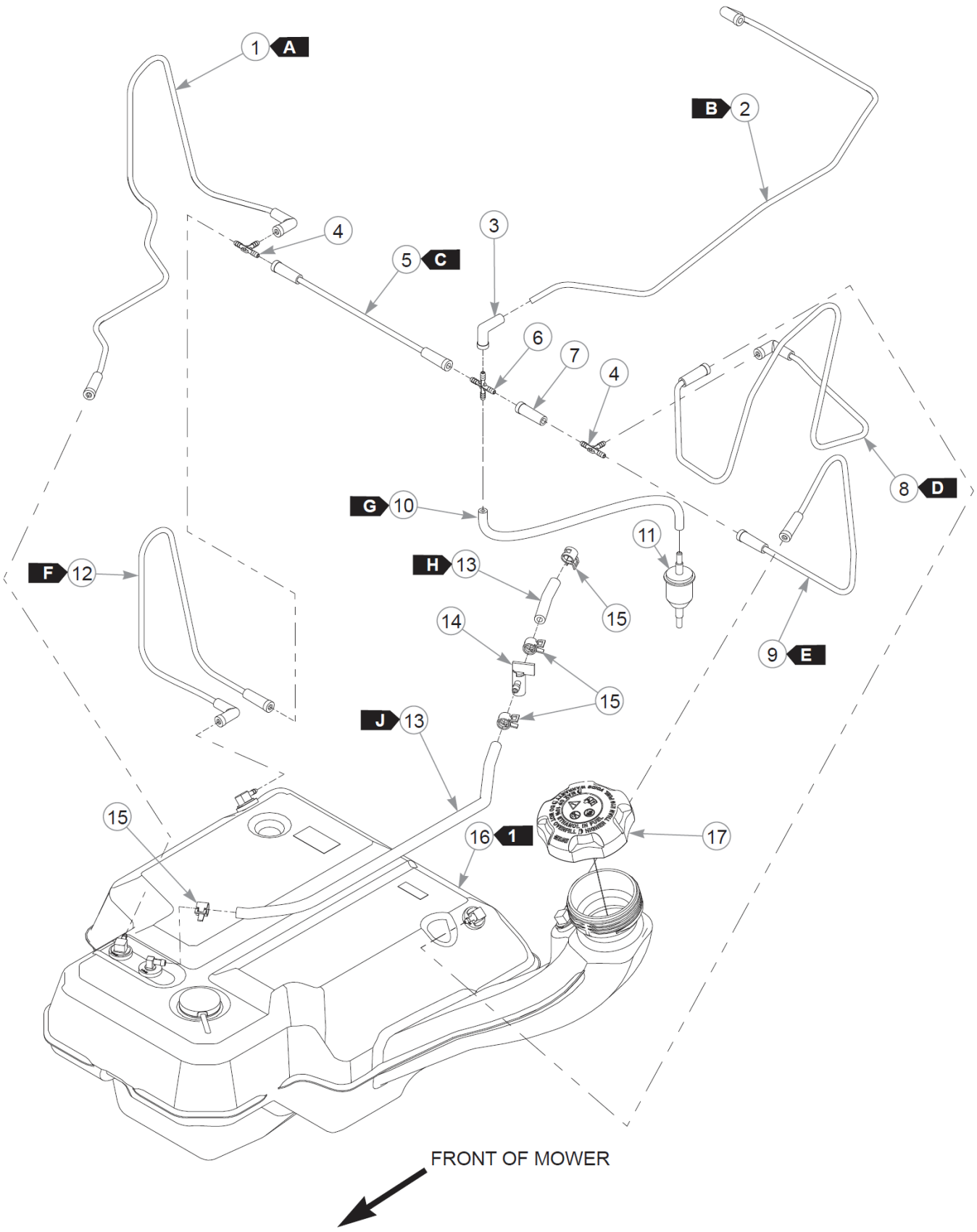
1 A
B 2
4
5 C
3
6
7
4
8 D
G 10
11
F 12
H 13
15
14
9 E
15
J 13
15
15
16 1
17
FRONT OF MOWER

Item	Part No.	Qty	Name
1	605491	1	VAPOR LINE, 3/16 FORMED
2	606447	1	VAPOR LINE, 3/16 FORMED
3	605565	1	BOOT, 3/16 TO 3/16
4	605690	2	TEE, 3/16" PLASTIC
5	605535	1	VAPOR LINE, 3/16 FORMED
6	605425	1	CROSS, 3/16" PLASTIC
7	605564	1	BOOT, 3/16 TO 3/16
8	605534	1	VAPOR LINE, 3/16 FORMED
9	605492	1	VAPOR LINE, 3/16 FORMED
10	603326	12"	VAPOR LINE, 3/16"
Comments for Part Num. 603326 Sold by the foot.			
11	604323	1	FILTER, VAPOR SYSTEM
12	605533	1	VAPOR LINE, 3/16 FORMED
13	015818	27"	FUEL LINE, 1/4"
Comments for Part Num. 015818 Sold by the foot.			
14	605601	1	FUEL SHUT-OFF VALVE
15	000323	4	CLIP, HOSE CLAMP
16	606581	1	FUEL TANK
Comments for Part Num. 606581 **IMPORTANT** Before replacing Fuel Tank, refer to Service Bulletin 550.			
17	603807	1	CAP, 3.5" RATCHETING GAS
18	016816	4	NT .250-20FLKG5
19	043570	2	CLIP - HOSE - SINGLE(FS)
20	706531	2	GM 1.12X1.75X1.37X.12
21	000331	8	WIRE TIE, SMALL/SHORT
22	604307	3	MOUNT, PUSH BUTTON
23	047456	1	GM .750X.188X1.00X.12
24	601503	4	CB .250-20 X .625 ZN
25	080358	1	GM .50X1.00X.75X.12
26	605542	1	ISOLATOR

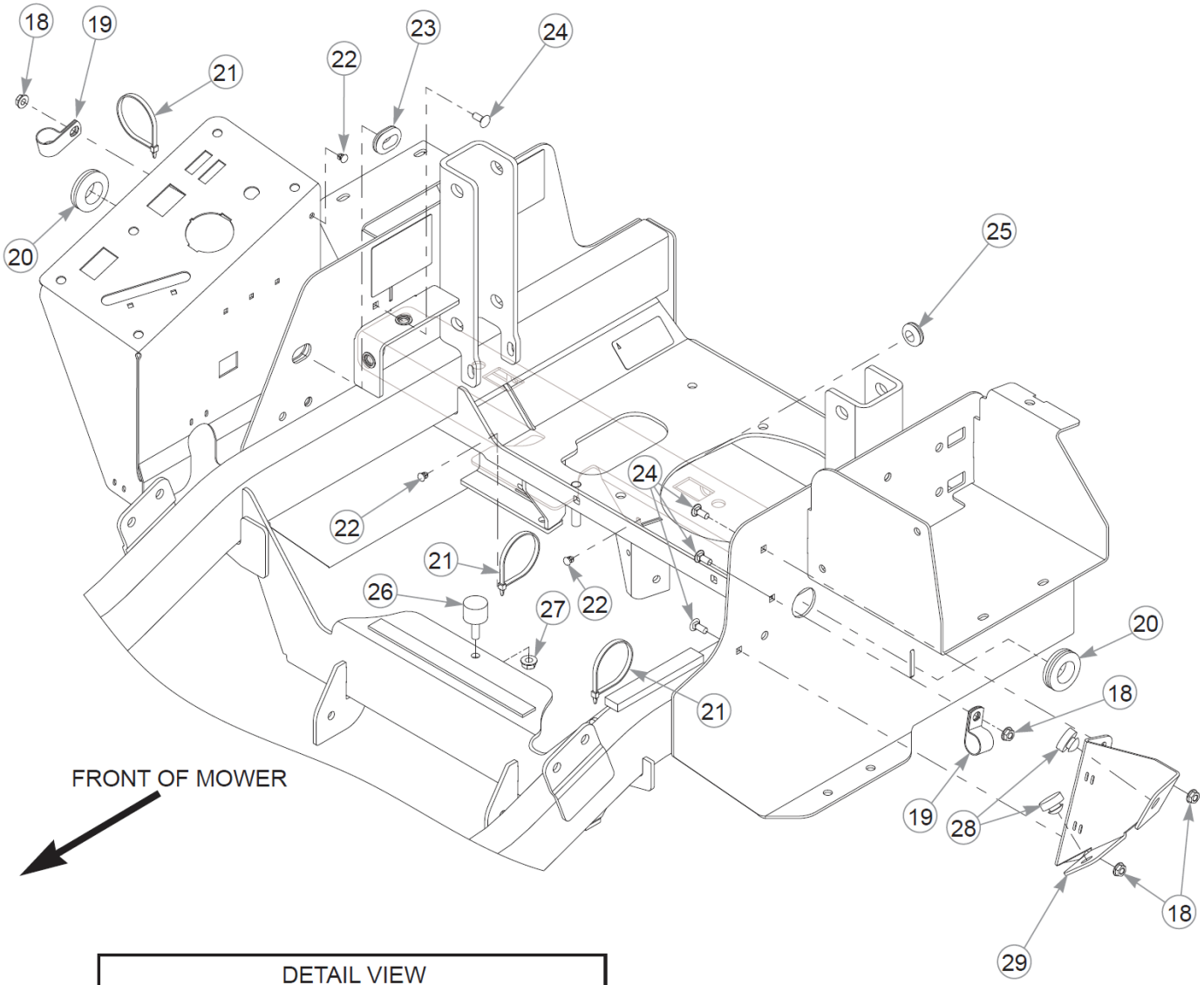
18
19
21
22
23
24
20
25
22
24
21
26
27
22
21
20
18
19
28
18
29
FRONT OF MOWER

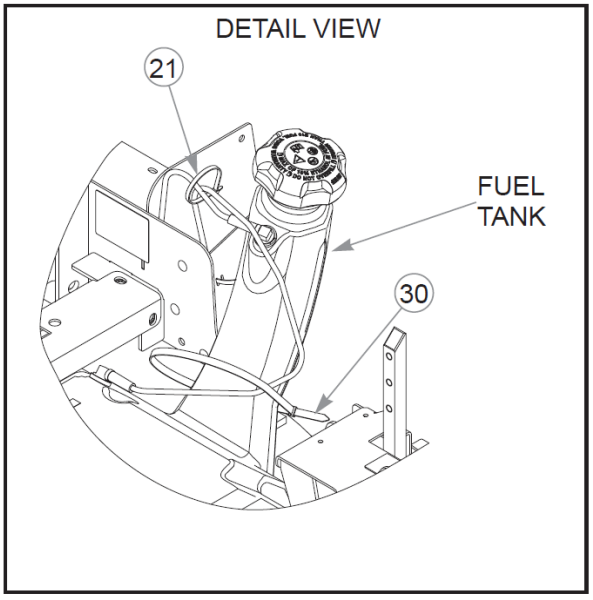
DETAIL VIEW
21
FUEL
TANK
30

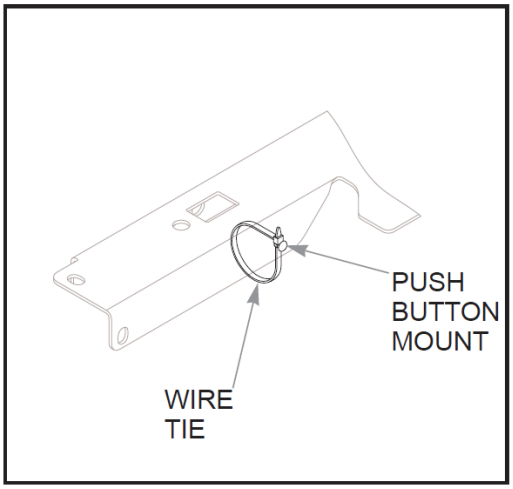
PUSH
BUTTON
MOUNT
WIRE
TIE

Item	Part No.	Qty	Name
27	016832	1	NT .312-18FLKG5
28	781880	2	BUMPER, .500x 1.00x .31
29	124348-1	1	TANK NECK SUPPORT
30	602725	1	WIRE TIE,
31	606487	2	TRIM LOCK, 0.88"

Comments for Page: Fuel System, Kohler - Without Carbon Canister (Multi-Page)

FUEL & VAPOR LINE LENGTHSA: FRONT RIGHT SIDE PORT TO TEE (VAPOR)B: ENGINE TO CROSS (VAPOR)C: TEE TO CROSS (VAPOR)D: LEFT BACK PORT TO TEE (VAPOR)E: FILLER NECK PORT TO TEE (VAPOR)F: RIGHT BACK PORT TO TEE (VAPOR)G: 12" CROSS TO FILTER (VAPOR)H: 2" VALVE TO ENGINE (FUEL)J: 25" TANK TO VALVE (FUEL)

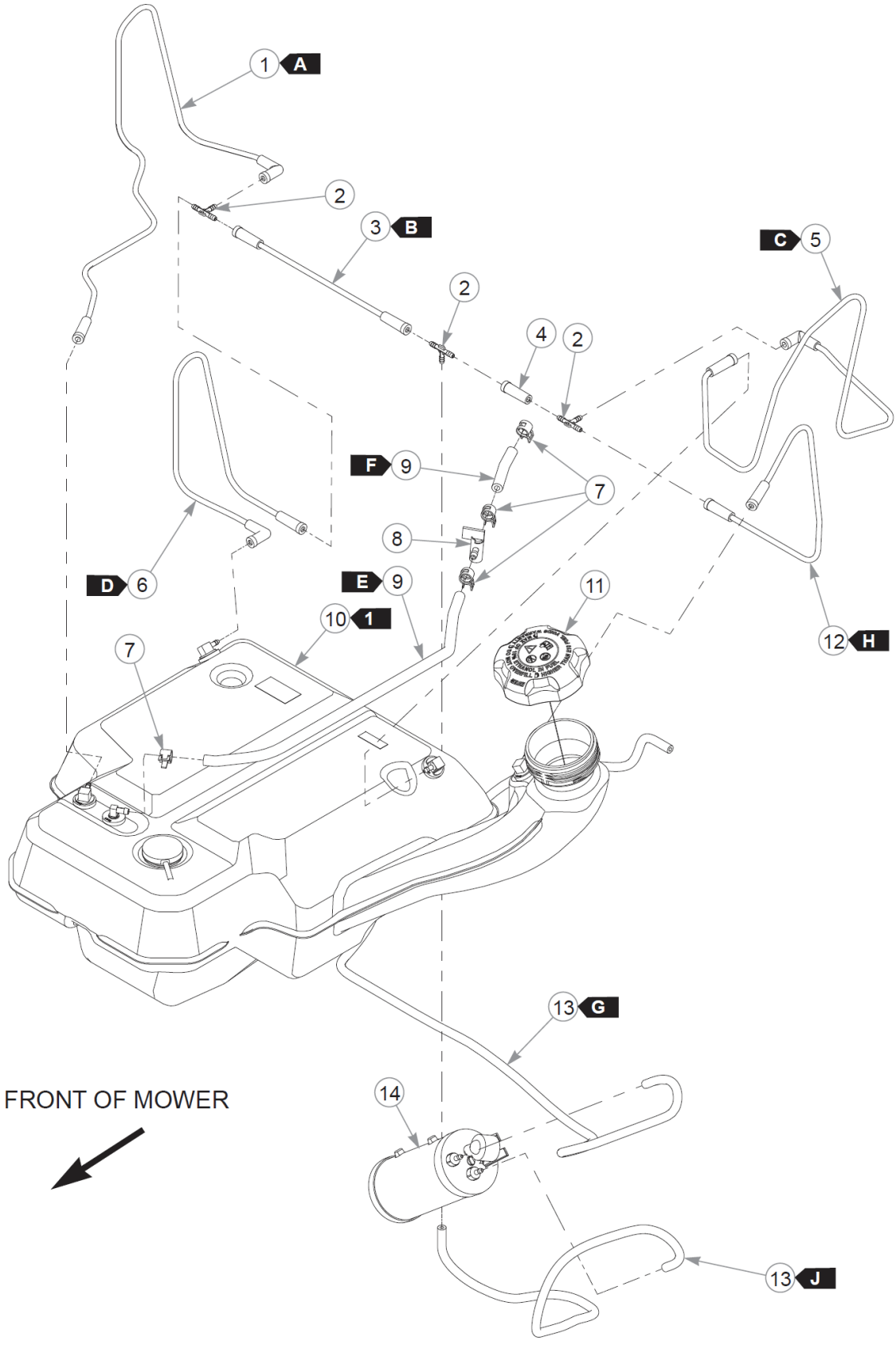
1 A
2
3 B
2
4
2
C 5
F 9
7
8
D 6
E 9
11
10 1
12 H
7
13 G
FRONT OF MOWER
14
13 J

Item	Part No.	Qty	Name
1	605491	1	VAPOR LINE, 3/16 FORMED
2	605690	3	TEE, 3/16" PLASTIC
3	605535	1	VAPOR LINE, 3/16 FORMED
4	605564	1	BOOT, 3/16 TO 3/16
5	605534	1	VAPOR LINE, 3/16 FORMED
6	605533	1	VAPOR LINE, 3/16 FORMED
7	000323	4	CLIP, HOSE CLAMP
8	605601	1	FUEL SHUT-OFF VALVE
9	015818	27"	FUEL LINE, 1/4"
Comments for Part Num. 015818 Sold by the foot.			
10	606581	1	FUEL TANK
Comments for Part Num. 606581 **IMPORTANT** Before replacing Fuel Tank, refer to Service Bulletin 550.			
11	603807	1	CAP, 3.5" RATCHETING GAS
12	605492	1	VAPOR LINE, 3/16 FORMED
13	603326	90.5"	VAPOR LINE, 3/16"
Comments for Part Num. 603326 Sold by the foot.			
14	605506	1	CARBON CANISTER
15	016816	4	NT .250-20FLKG5
16	043570	2	CLIP - HOSE - SINGLE(FS)
17	706531	2	GM 1.12X1.75X1.37X.12
18	000331	7	WIRE TIE, SMALL/SHORT
19	604307	3	MOUNT, PUSH BUTTON
20	047456	1	GM .750X.188X1.00X.12
21	601503	4	CB .250-20 X .625 ZN
22	603363	1	DECAL, ANSI COMPLIANCE
23	601908	1	DECAL, SPARK ARRESTOR
24	605542	1	ISOLATOR
25	016832	3	NT .312-18FLKG5
26	064006	2	CS .312-18X0.625HXG5

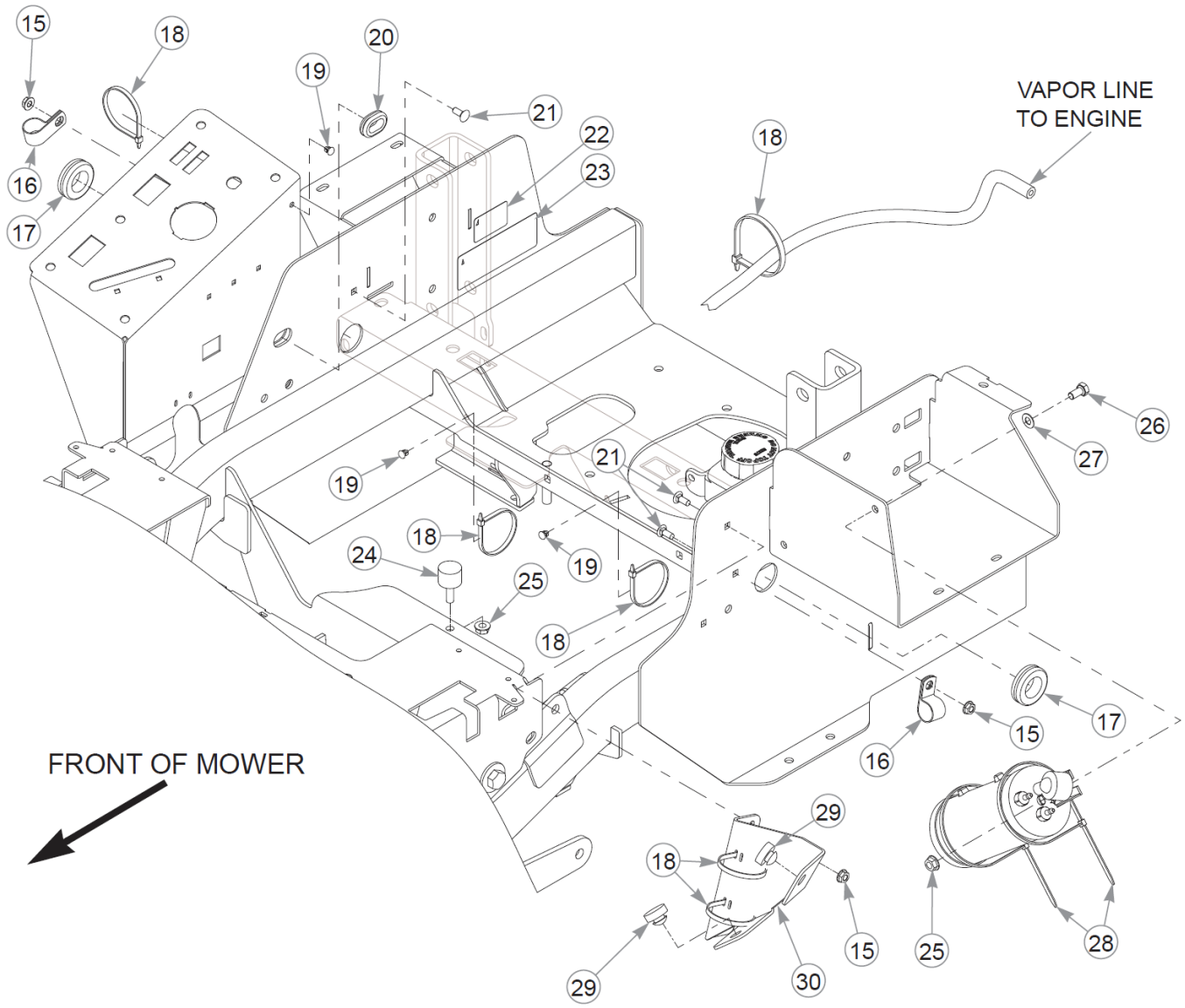
VAPOR LINE
TO ENGINE
FRONT OF MOWER

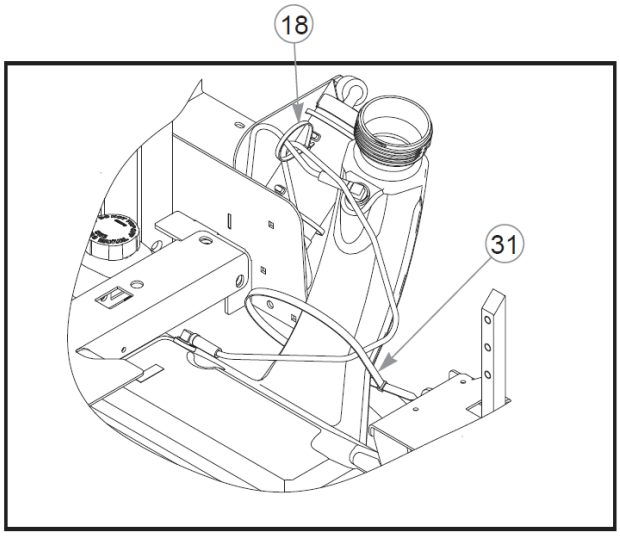

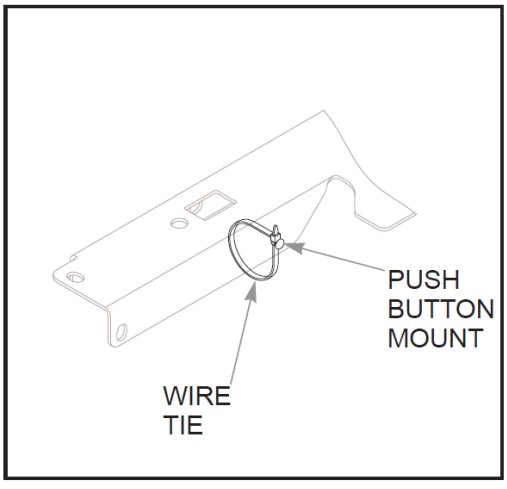
PUSH
BUTTON
MOUNT
WIRE
TIE

Item	Part No.	Qty	Name
27	604252	2	FW .340X.68X.04 ZN
28	000430	2	WIRE TIE, SMALL/LONG
29	781880	2	BUMPER, .500x 1.00x .31
30	124348-1	1	TANK NECK SUPPORT
31	602725	1	WIRE TIE,

Comments for Page: Fuel System, Kohler - With Carbon Canister (Multi-Page)

1. **IMPORTANT**

Before replacing Fuel Tank, refer to Service Bulletin 550.

FUEL & VAPOR LINE LENGTHS

A: FRONT RIGHT SIDE PORT TO TEE (VAPOR)

B: TEE TO TEE (VAPOR)

C: LEFT BACK PORT TO TEE (VAPOR)

D: RIGHT BACK PORT TO TEE (VAPOR)

E: 25" TANK TO VALVE (FUEL)

F: 2" VALVE TO ENGINE (FUEL)

G: 60" ENGINE TO CARBON CANISTER (VAPOR)

H: FILLER NECK PORT TO TEE (VAPOR)

J: 30.5" TEE TO CARBON CANISTER (VAPOR)

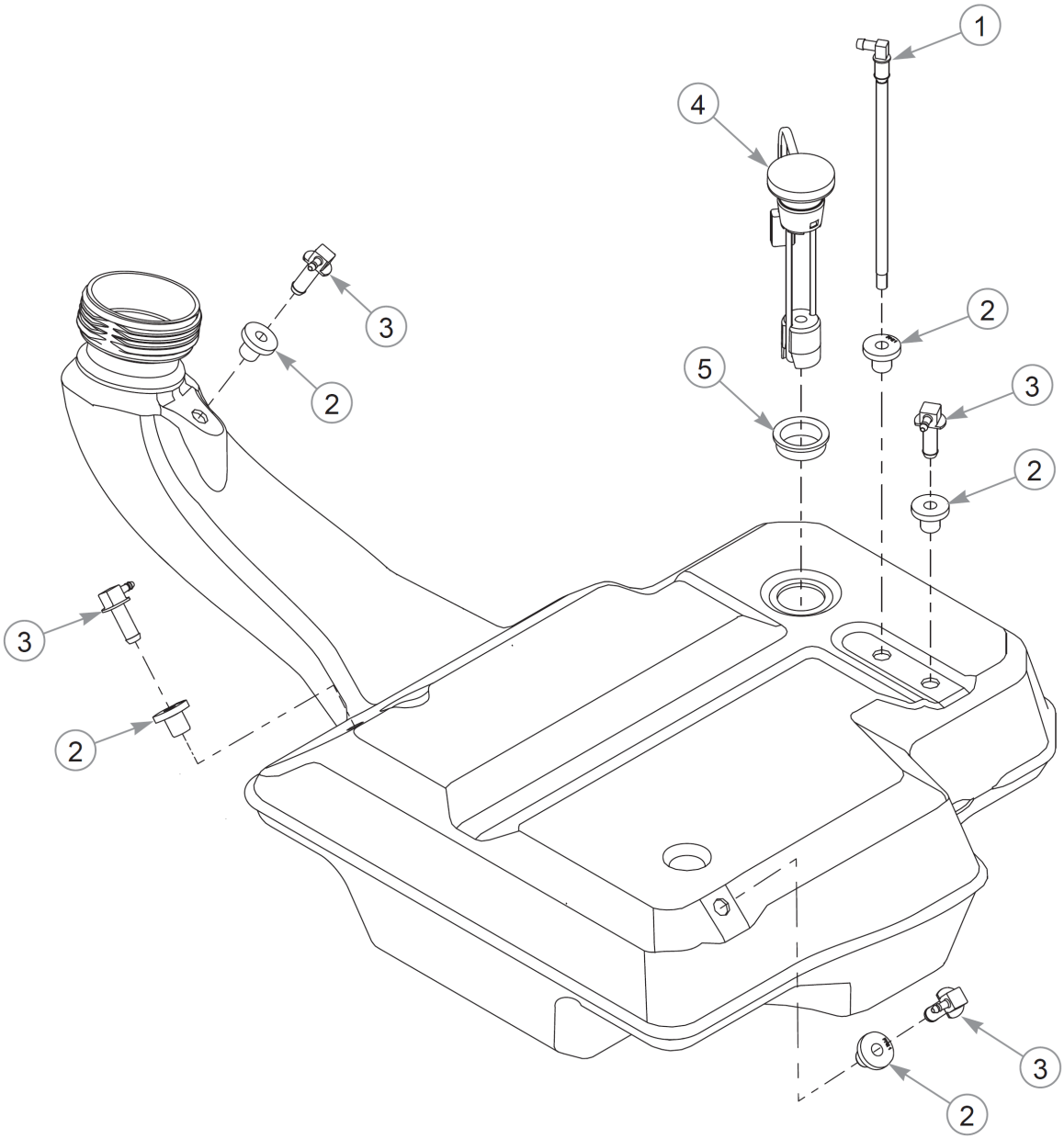
1
4
3
2
5
3
2
3
2
3
2

Item	Part No.	Qty	Name
1	605126K	1	SVC KIT, SUCTION HOSE
2	604200K	5	SVC KIT, GROMMET
3	604287K	4	SVC KIT, VENT FITTING
4	605482K	1	SVC KIT, FUEL SENDER
5	605648K	1	SVC KIT, TANK GROMMET

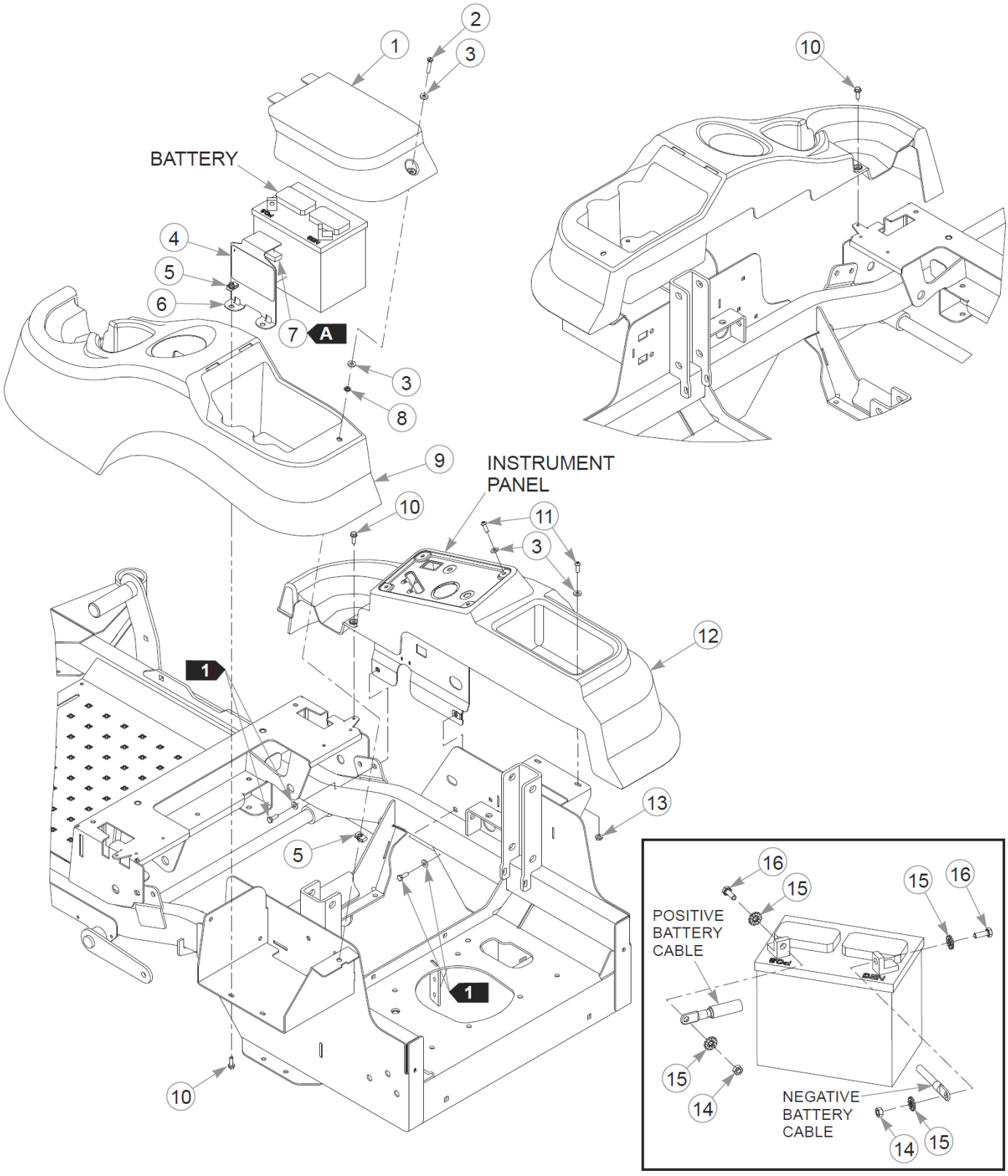
BATTERY
INSTRUMENT PANEL
POSITIVE BATTERY CABLE
NEGATIVE BATTERY CABLE

Item	Part No.	Qty	Name
1	605558	1	FENDER LID
2	605627	1	CS .250-20 X 1.25 HX
3	605628	8	FW 0.281X.63X.07 ZB
4	601815	1	DECAL, BATTERY WARNINGS
5	601982	3	CN .250-20X .150 MAX THK
6	552858	1	BATTERY HOLD DOWN
7	713198	2.5"	SEAL 3/8x3/4 SOLD BY FT
8	605629	1	UNTHREADED PN 0.250 ID
9	605522	1	LH FENDER
Comments for Part Num. 605522 The ‘decal’ which is on this fender is an ‘in-mold label’ and not available for purchase separately.			
10	604324	4	CS .250-20 X .75 HX FLG
11	605473	6	CS .250-20X0.75 BH TX BZ
12	605521	1	RH FENDER
Comments for Part Num. 605521 The ‘decal’ which is on this fender is an ‘in-mold label’ and not available for purchase separately.			
13	016816	2	NT .250-20FLKG5
14	024927	2	NT .250-20HXG5
15	029868	4	LW .250 INTEXT ZN
16	055939	2	CS .250-20X0.75 HX G5 ZN

Comments for Page: Fenders & Battery

SEAL LENGTH:

A: 2.5"

1. Part of the Instrument Panel Assembly.

2. When performing service on the mower, disconnect the negative battery cable (black) and do not reconnect it to the battery until ready to start the engine.

3. 552858 (battery hold down) includes the seal.

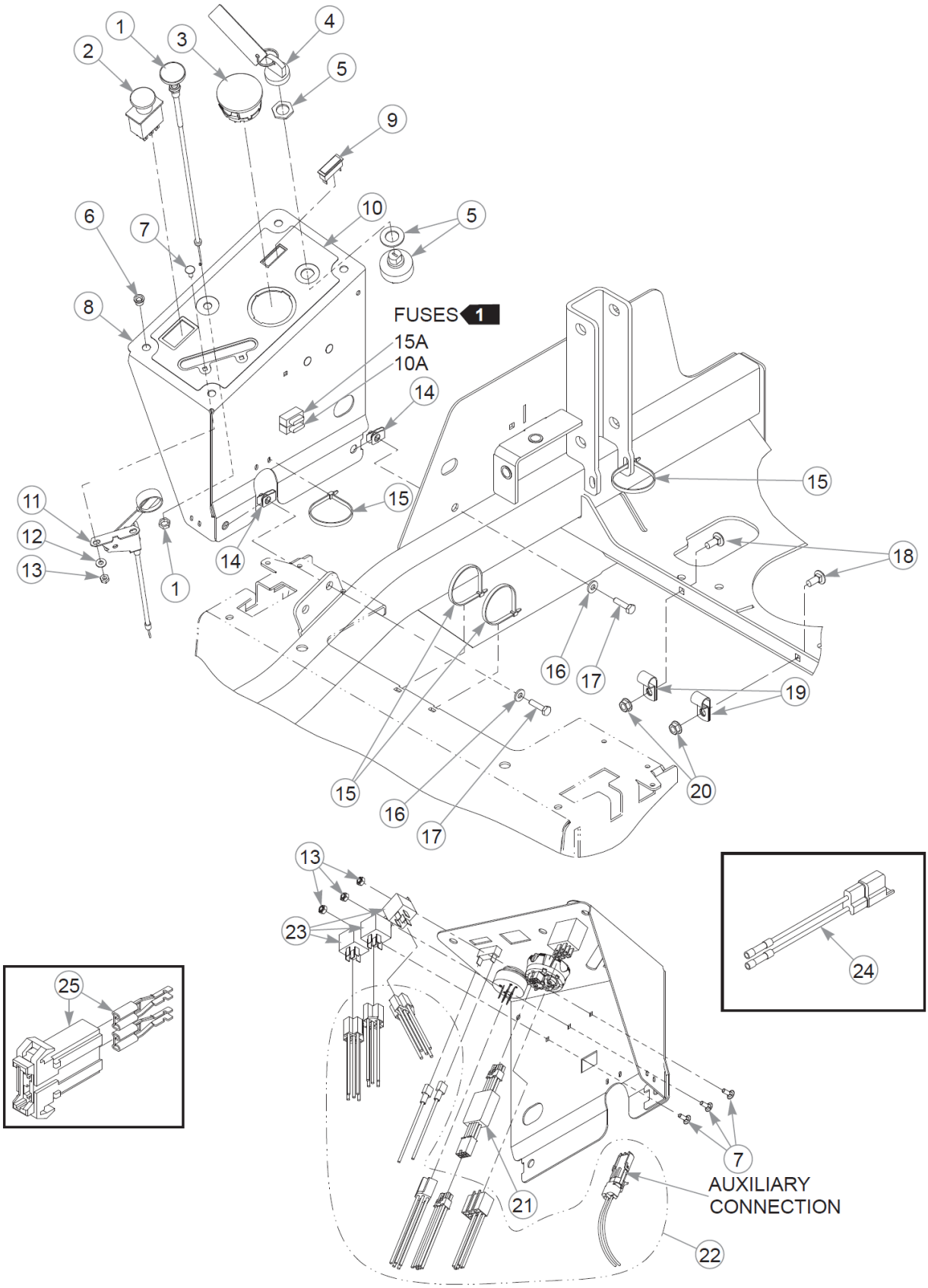
FUSES 1
15A
10A
AUXILIARY CONNECTION

Item	Part No.	Qty	Name
1	786657	1	CABLE, CHOKE
2	776476	1	SWITCH, PTO 6201-321
3	605483	1	GAUGE, FUEL/HOURMETER
4	785808	1	KEY ASSEMBLY
5	045898	1	IGNITION SWITCH
6	808477	4	RIVET NUT, 1/4-20 THREA
7	601098	5	CB 10-24 X .500 ZYNC
8	552855	1	INSTR PANEL (W/ DECAL)
9	712257	1	INDICATOR LIGHT, RED(FS)
10	605605	1	DECAL, INST PANEL
11	778365	1	CABLE, THROTTLE
12	704932	2	FW 0.219X.50X.05 ZN
13	059832	5	NT #10-24 HX NL ZN
14	601982	2	CN .250-20X .150 MAX THK
15	000331	6	WIRE TIE, SMALL/SHORT
16	768515	2	FW 0.281SAE
17	056077	2	CS .250-20X1.000HXG5
18	016253	2	CB .312-18X .750 FUL ZN
19	000398	2	CLAMP - 50 CNT BAGS
20	016832	2	NT .312-18FLKG5
21	605554	1	WIRE HARNESS ADAPTER
22	605458	1	WIRE HARNESS, FSD/SMP
23	601053	2	RELAY, SEALED W/BRACKET
24	114052	1	KIT, CLUTCH CONN. REP.
25	601047	1	HOLDER, FUSE

Comments for Page: Instrument Panel, Kawasaki

1. Part of the wire harness.

2. The instrument panel includes the decal (605605).

3. The sealed relay includes a bracket.

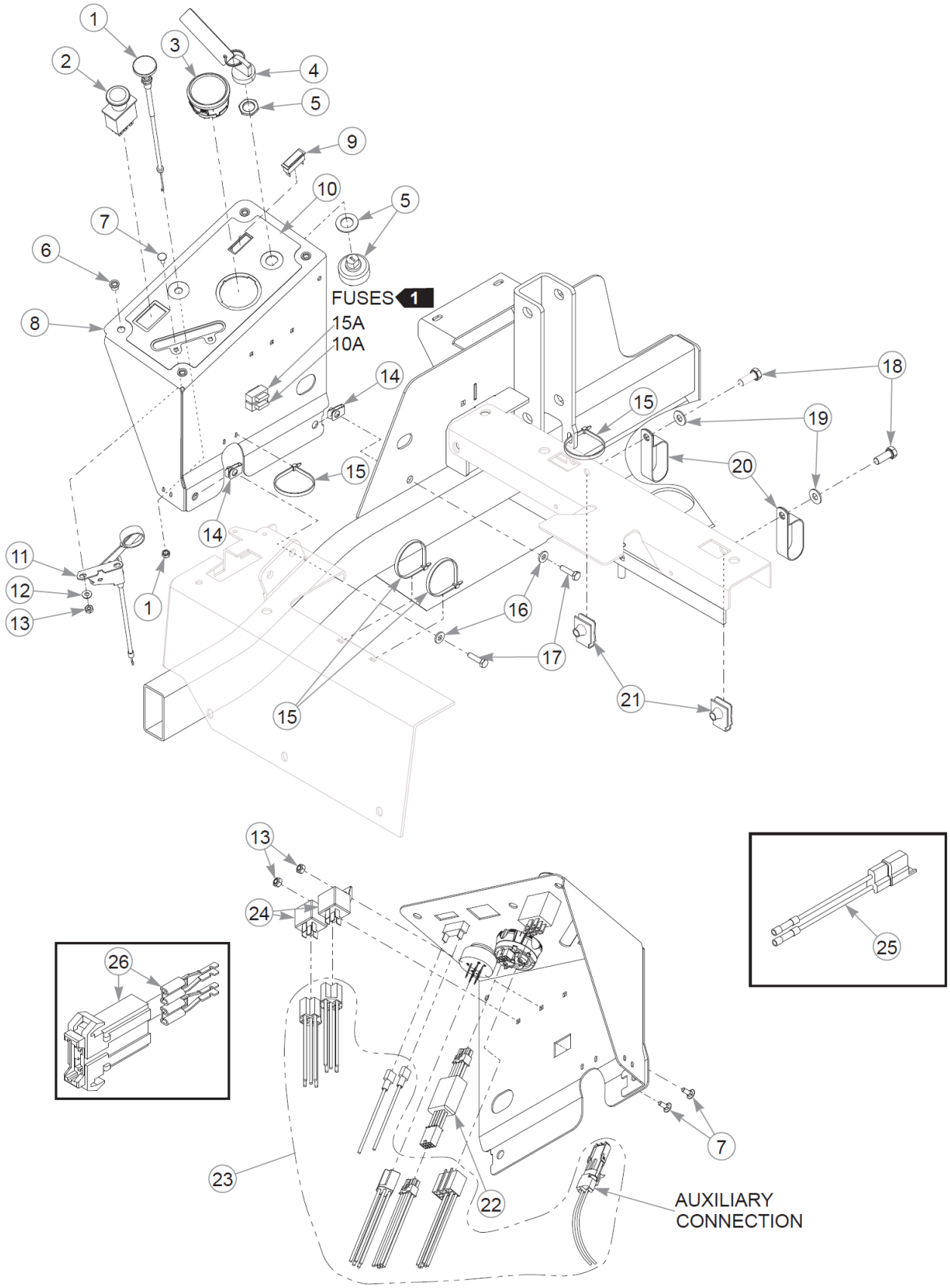
FUSES 1
15A
10A
AUXILIARY CONNECTION

Item	Part No.	Qty	Name
1	785030	1	CABLE, CHOKE
2	776476	1	SWITCH, PTO 6201-321
3	605483	1	GAUGE, FUEL/HOURMETER
4	785808	1	KEY ASSEMBLY
5	045898	1	IGNITION SWITCH
6	808477	4	RIVET NUT, 1/4-20 THREA
7	601098	4	CB 10-24 X .500 ZYNC
8	552855	1	INSTR PANEL (W/ DECAL)
9	712257	1	INDICATOR LIGHT, RED(FS)
10	605605	1	DECAL, INST PANEL
11	606472	1	CABLE ASSY, THROTTLE 43"
12	704932	2	FW 0.219X.50X.05 ZN
13	059832	4	NT #10-24 HX NL ZN
14	601982	2	CN .250-20X .150 MAX THK
15	000331	5	WIRE TIE, SMALL/SHORT
16	768515	2	FW 0.281SAE
17	056077	2	CS .250-20X1.000HXG5
18	036244	2	CS .375-16X1.00 HX G5 ZN
19	767954	2	FW 0.379X.82X.06 HD ZN
20	045088	2	HOSE CLAMP 1" (FS)
21	601758	2	CN .375-16x.200 MAX THK
22	605554	1	WIRE HARNESS ADAPTER
23	606444	1	WIRE HARNESS, FST
24	601053	2	RELAY, SEALED W/BRACKET
25	114052	1	KIT, CLUTCH CONN. REP.
26	601047	1	HOLDER, FUSE

Comments for Page: Instrument Panel, Kohler

1. Part of the wire harness.

2. The instrument panel includes the decal.

3. The relay includes a bracket.

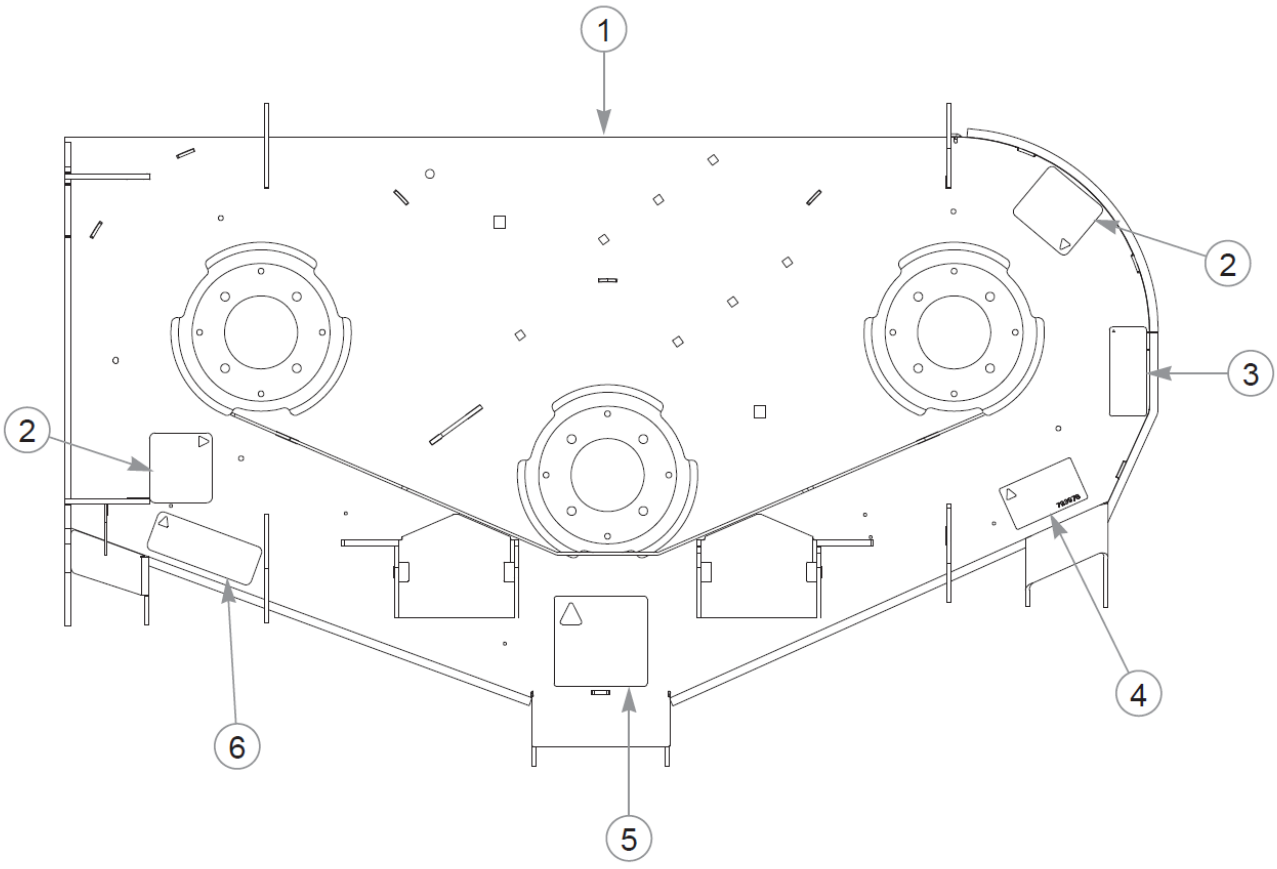
1
2
3
2
4
6
5

Item	Part No.	Qty	Name
1	552872	1	48" SERVICE DECK
2	601837	2	DECAL, DECK DANGERS
3	601892	1	DECAL, THROWN OBJECTS
4	793976	1	DECAL,48"DECK ID
5	781419	1	DECAL, BELT ROUTING
6	601624	1	DECAL, DISCHARGE CHUTE

Comments for Page: 48" Service Deck

1. The deck includes the decals.

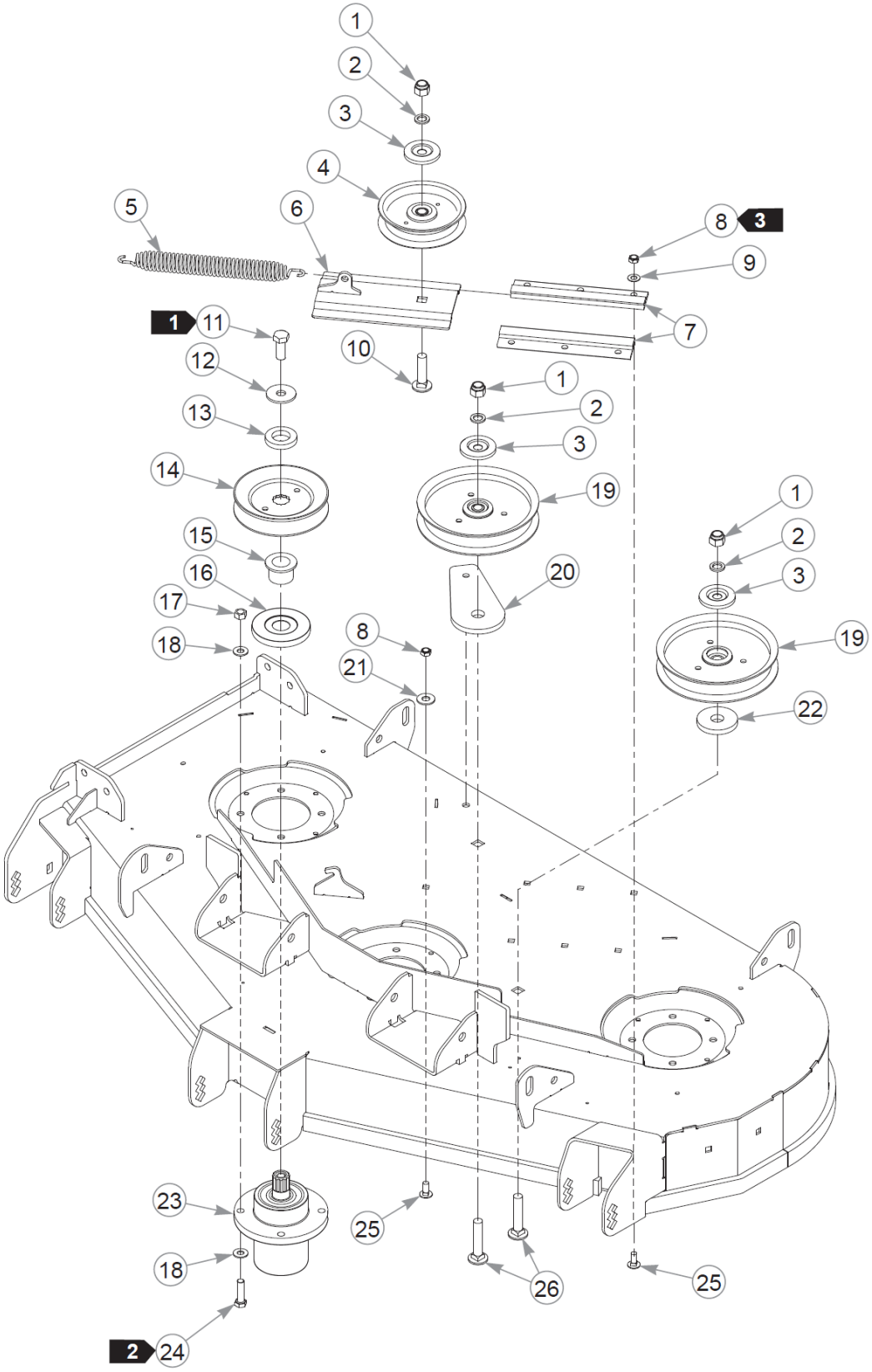
1
2
3
4
5
6
8
3
9
7
1
11
12
13
14
10
1
2
3
19
15
16
17
18
20
8
21
1
2
3
19
22
23
18
2
24
25
26
25

Item	Part No.	Qty	Name
1	781567	3	NT .500-13NLG5
2	604486	3	FW .531X.812X.089 HD
3	605467	3	DUST SHIELD
4	605512	1	4" IDLER PULLEY
5	607616	1	SPRING, DECK IDLER
6	121052	1	SLED, TENSIONER
7	604790	2	IDLER SLIDE, EXTRUDED
8	604251	7	NT .312-18 HXNL JAM G2ZN
9	604252	6	FW .340X.68X.04 ZN
10	604253	1	CB .50-13 X 2.00 STD ZN
11	705954	3	CS .500-13X1.25 HX G5 ZN
12	798603	3	FW .515X1.65X.12 HD ZN
13	604777	3	SPINDLE SPACER
14	604665	3	PULLEY, DECK DRIVE B-SEC
15	605504	3	SPACER, PULLEY
16	606362	3	DUST SHIELD
17	054502	12	NT .375-16HXG5
18	767954	24	FW 0.379X.82X.06 HD ZN
19	605463	2	6.00" IDLER PULLEY
20	605465	1	BASE, IDLER PULLEY MOUNT
21	017129	1	FW .440X1.00X0.08 ZN
22	605508	1	FW .73X2.25X.31 ZN
23	605380	3	SPINDLE ASSY, 12PT
24	005116	12	CS .375-16X1.38 HX G5 ZN
25	016253	7	CB .312-18X .750 FUL ZN
26	604254	2	CB .50-13 X 2.50 STD ZN

Comments for Page: 48" Deck Pulleys & Spindles

1. Torque to 73 ft-lbs.
2. Torque to 30 ft-lbs.
3. Torque to 3–6 ft-lbs.

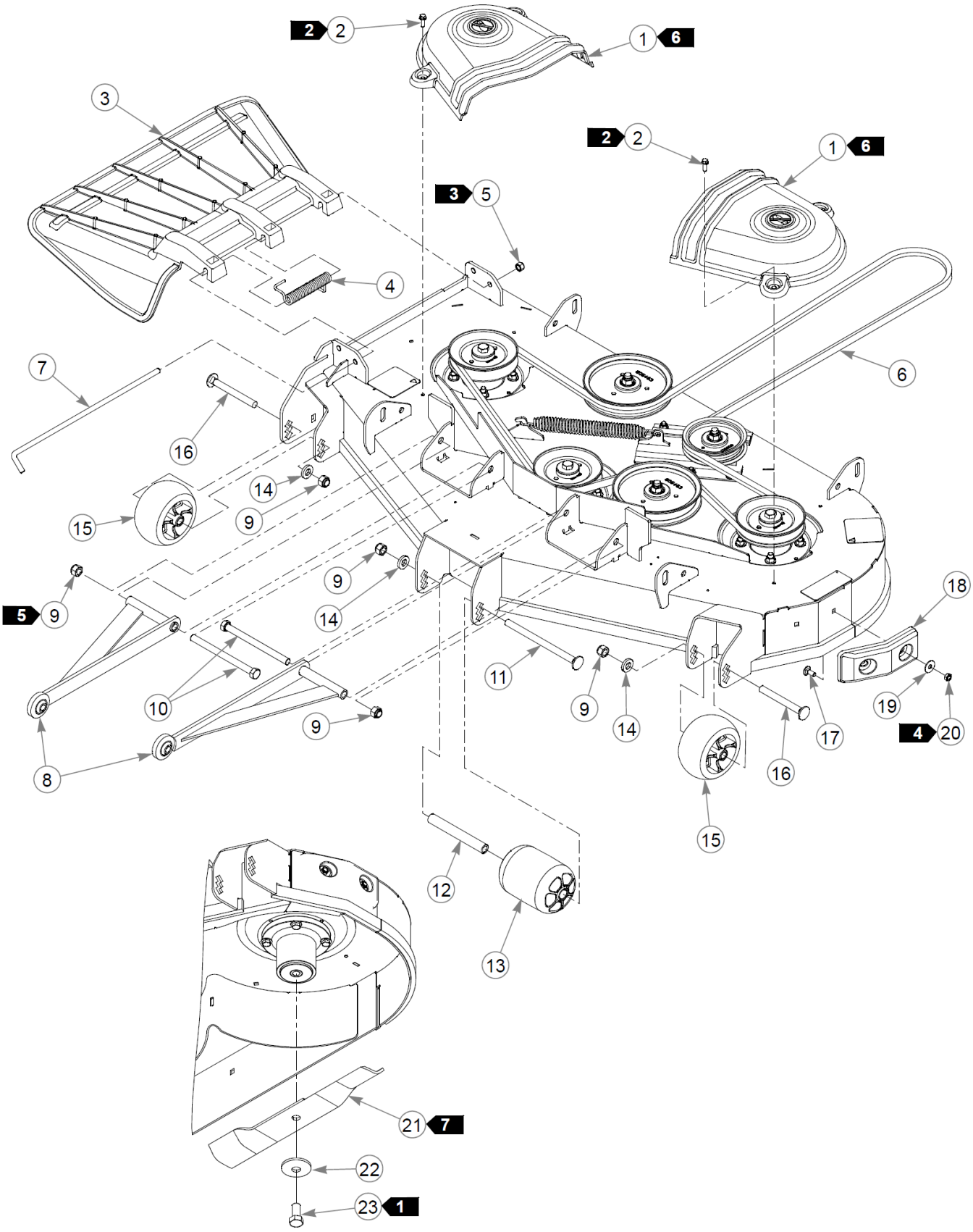
2 2
1 6
3
2 2
1 6
3 5
4
7
6
16
14
9
15
9
5 9
14
18
11
9
14
19
4 20
10
9
8
17
16
15
12
13
21 7
22
23 1

Item	Part No.	Qty	Name
1	605867	2	PULLEY COVER, UNIVERSAL
2	604324	4	CS .250-20 X .75 HX FLG
3	605469	1	DISCHARGE CHUTE
4	602435	1	SPRING, TORSION
5	086660	1	NT .375-16NLG8
6	791335	1	DECK BELT
7	602432	1	PIN, CHUTE
8	113717	2	PULLER W/A 14.53" C/C
9	781567	5	NT .500-13NLG5
10	042630	2	CS .500-13X6.500HXG5
11	602338	1	CB .50-13 X 7.50 STD ZN
12	602344	1	SPACER, ANTI- SCALP 5.73
13	602341	1	WHEEL, ANTI-SCALP
14	767962	3	FW .531 x 1.063 x .175
15	604780	2	WHEEL, ANTI-SCALP
16	602339	2	CB .50-13 X 4.50 STD ZN
17	016253	2	CB .312-18X .750 FUL ZN
18	605376	1	DECK BUMPER
19	079210	2	FW 0.344X1.0X0.06 ZN
20	604251	2	NT .312-18 HXNL JAM G2ZN
21	606252	3	BLADE, 16.5"-H-F-CW
Not Shown	601123	3	BLADE, 16.50"-L-F-CW
Not Shown	796631	3	BLADE, 16.50"-GAT-F-CW
Not Shown	796623	3	BLADE, 16.50"-MUL-F-CW
22	782474	3	CW .678 X 2.250 X .187
23	781872	3	CS .625-11X1.250HXG5

Comments for Page: 48" Deck

1. Torque to 118 ft-lbs.2. Torque to 2–5 ft-lbs on these self-tapping screws.3. Do not torque; the discharge chute must pivot freely.4. Torque to 3–6 ft-lbs.5. Torque to 4–7 ft-lbs.6. Mowers with serial numbers prior to 15080123 require kit 122667, which includes drill templates and (1) pulley cover 605867.7. These blades are approved for use with Catcher 606045: 606252 BLADE, 16.5"-H-F-CW 601123 BLADE, 16.50"-L-F-CW 796631 BLADE, 16.50"-GAT-F-CW 796623 BLADE, 16.50"-MUL-F-CW

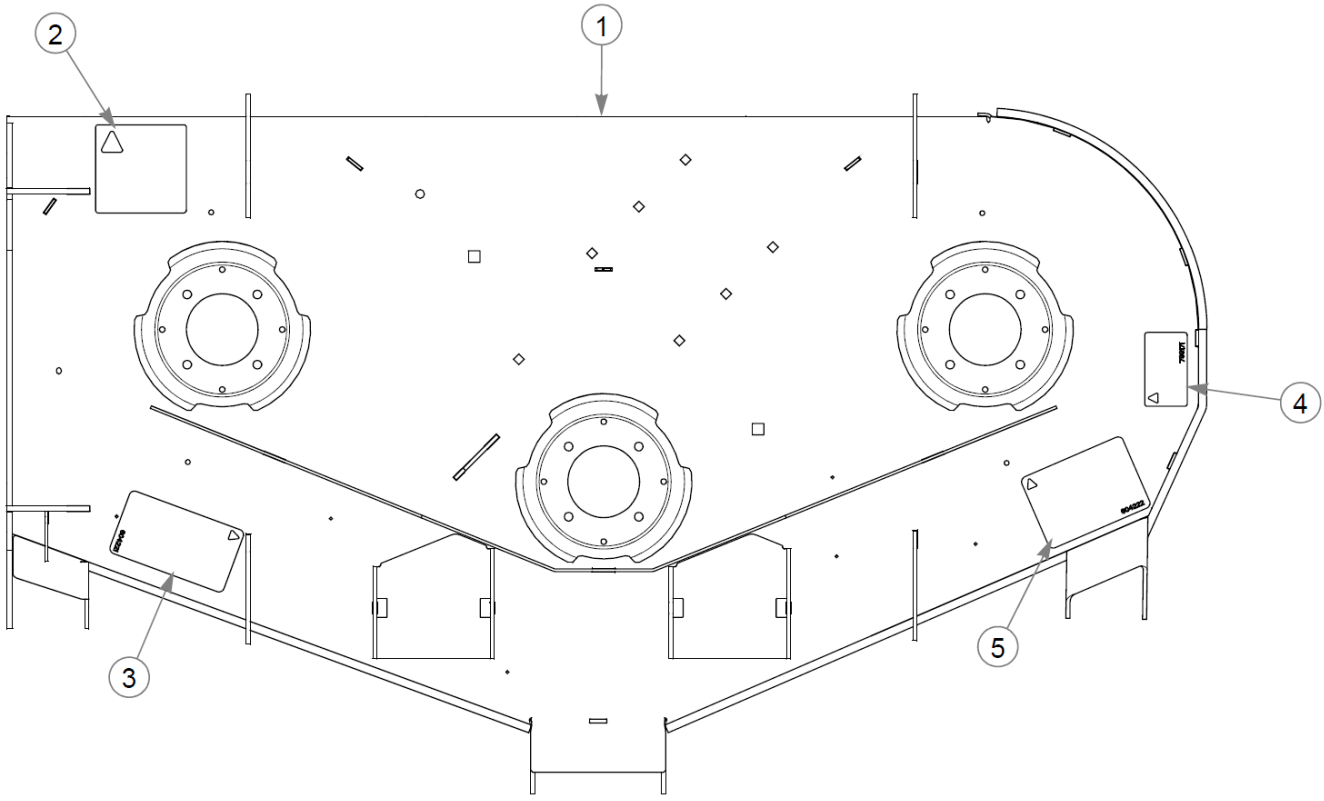
2
1
4
3
5

Item	Part No.	Qty	Name
1	552873	1	54" SERVICE DECK
2	781419	1	DECAL, BELT ROUTING
3	604221	1	DECAL, DANGER / CHUTE
4	799171	1	DECAL, Z 54" Deck ID
5	604222	1	DECAL, DANGER / OBJECTS

Comments for Page: 54" Service Deck

1. The deck includes the decals.

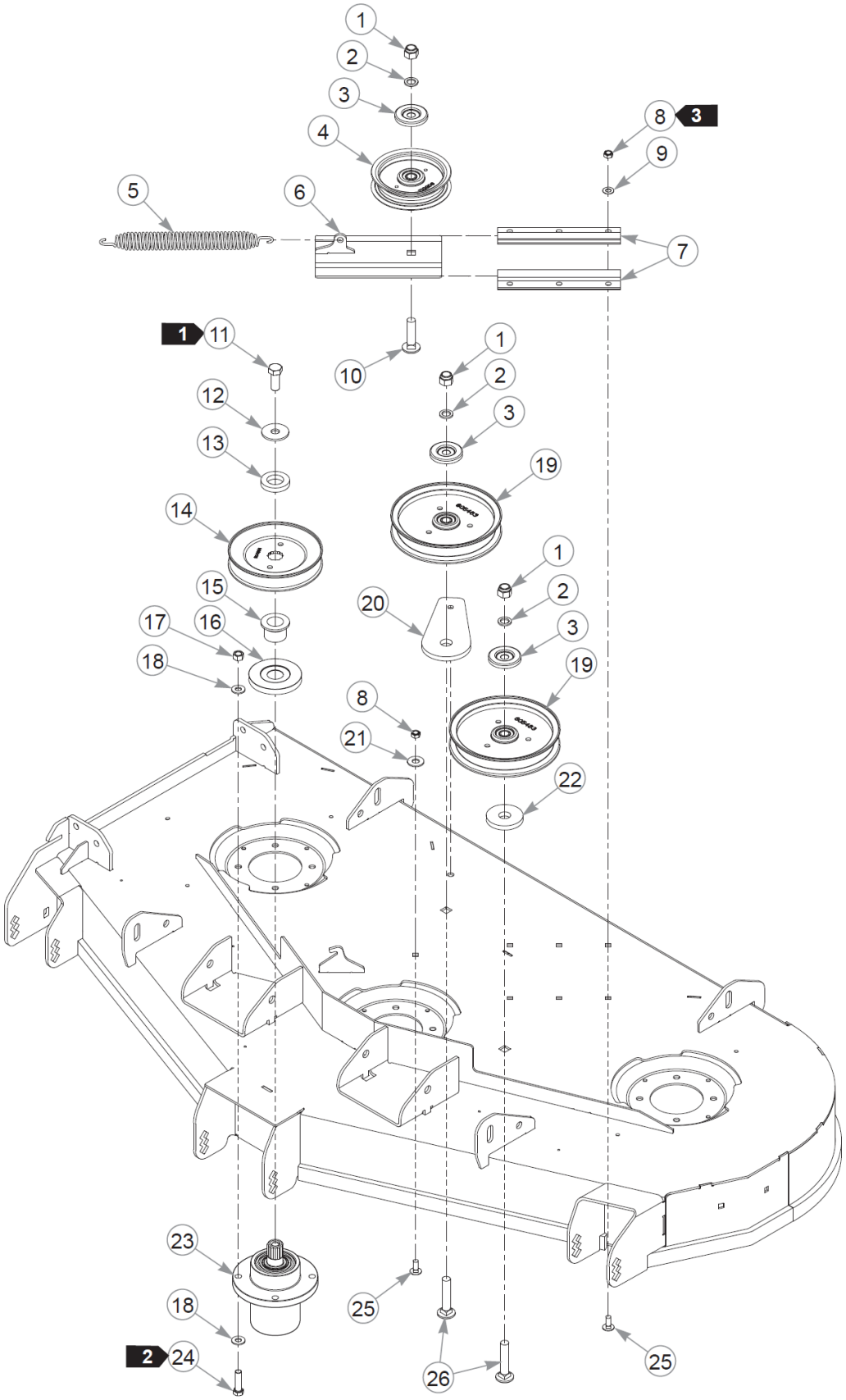
1
2
3
4
5
6
8
3
9
7
1
11
10
1
2
3
12
13
19
14
1
2
3
15
20
17
16
18
19
8
21
22
23
18
2
24
25
26
25

Item	Part No.	Qty	Name
1	781567	3	NT .500-13NLG5
2	604486	3	FW .531X.812X.089 HD
3	605467	3	DUST SHIELD
4	605512	1	4" IDLER PULLEY
5	607616	1	SPRING, DECK IDLER
6	121052	1	SLED, TENSIONER
7	604790	2	IDLER SLIDE, EXTRUDED
8	604251	7	NT .312-18 HXNL JAM G2ZN
9	604252	6	FW .340X.68X.04 ZN
10	604253	1	CB .50-13 X 2.00 STD ZN
11	705954	3	CS .500-13X1.25 HX G5 ZN
12	798603	3	FW .515X1.65X.12 HD ZN
13	604777	3	SPINDLE SPACER
14	604664	3	PULLEY, DECK DRIVE B-SEC
15	605504	3	SPACER, PULLEY
16	606362	3	DUST SHIELD
17	054502	12	NT .375-16HXG5
18	767954	24	FW 0.379X.82X.06 HD ZN
19	605463	2	6.00" IDLER PULLEY
20	605465	1	BASE, IDLER PULLEY MOUNT
21	017129	1	FW .440X1.00X0.08 ZN
22	605508	1	FW .73X2.25X.31 ZN
23	605380	3	SPINDLE ASSY, 12PT
24	005116	12	CS .375-16X1.38 HX G5 ZN
25	016253	7	CB .312-18X .750 FUL ZN
26	604254	2	CB .50-13 X 2.50 STD ZN

Comments for Page: 54" Deck Pulleys & Spindles

1. Torque to 73 ft-lbs.
2. Torque to 30 ft-lbs.
3. Torque to 3–6 ft-lbs.

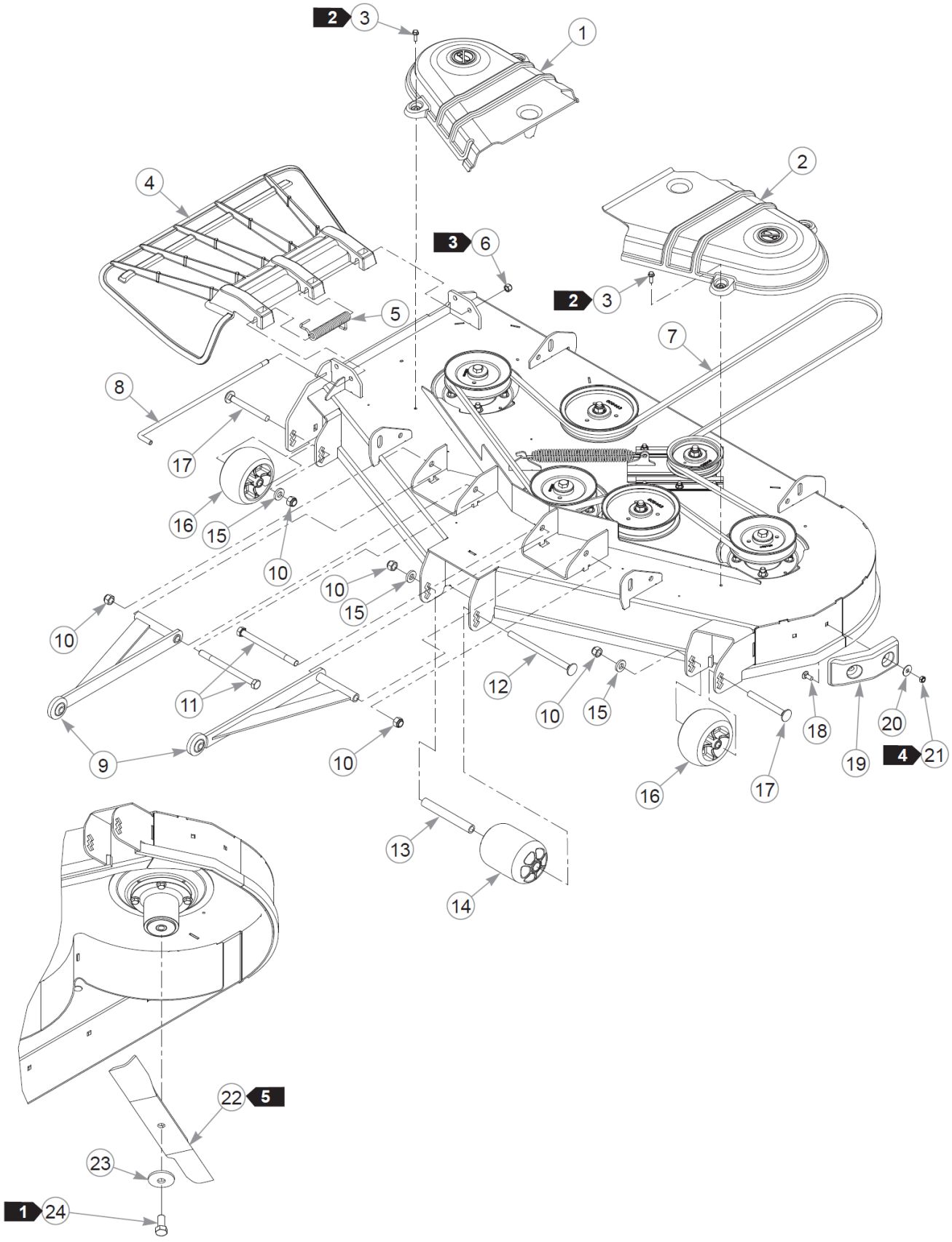
2 3
1
4
2
3 6
2 3
5
7
8
17
16
15
10
10
15
10
12
10
15
18
20
19
4 21
16
17
11
9
10
13
14
22 5
23
1 24

Item	Part No.	Qty	Name
1	604722	1	PULLEY COVER, RIGHT SIDE
2	604723	1	PULLEY COVER, LEFT SIDE
3	604324	4	CS .250-20 X .75 HX FLG
4	605469	1	DISCHARGE CHUTE
5	602435	1	SPRING, TORSION
6	086660	1	NT .375-16NLG8
7	786483	1	DECK BELT
8	602432	1	PIN, CHUTE
9	113717	2	PULLER W/A 14.53" C/C
10	781567	5	NT .500-13NLG5
11	042630	2	CS .500-13X6.500HXG5
12	602338	1	CB .50-13 X 7.50 STD ZN
13	602344	1	SPACER, ANTI- SCALP 5.73
14	602341	1	WHEEL, ANTI-SCALP
15	767962	3	FW .531 x 1.063 x .175
16	604780	2	WHEEL, ANTI-SCALP
17	602339	2	CB .50-13 X 4.50 STD ZN
18	016253	2	CB .312-18X .750 FUL ZN
19	605376	1	DECK BUMPER
20	079210	2	FW 0.344X1.0X0.06 ZN
21	604251	2	NT .312-18 HXNL JAM G2ZN
22	606251	3	BLADE, 18.50"-H-F-CW
Not Shown	601124	3	BLADE, 18.50"-L-F-CW
Not Shown	797712	3	BLADE, 18.50"-GAT-F-CW
Not Shown	797704	3	BLADE, 18.50"-MUL-F-CW
23	782474	3	CW .678 X 2.250 X .187
24	781872	3	CS .625-11X1.250HXG5

Comments for Page: 54" Deck

1. Torque to 118 ft-lbs.

2. Torque to 2–5 ft-lbs on these self-tapping screws.

3. Do not torque; the discharge chute must pivot freely.

4. Torque to 3–6 ft-lbs.

5. These blades are approved for use with Catcher 606045:

606251BLADE, 18.5"-H-F-CW

601124BLADE, 18.5"-L-F-CW

797712BLADE, 18.5"-GAT-F-CW

797704BLADE, 18.5"-MUL-F-CW

This page intentionally left blank

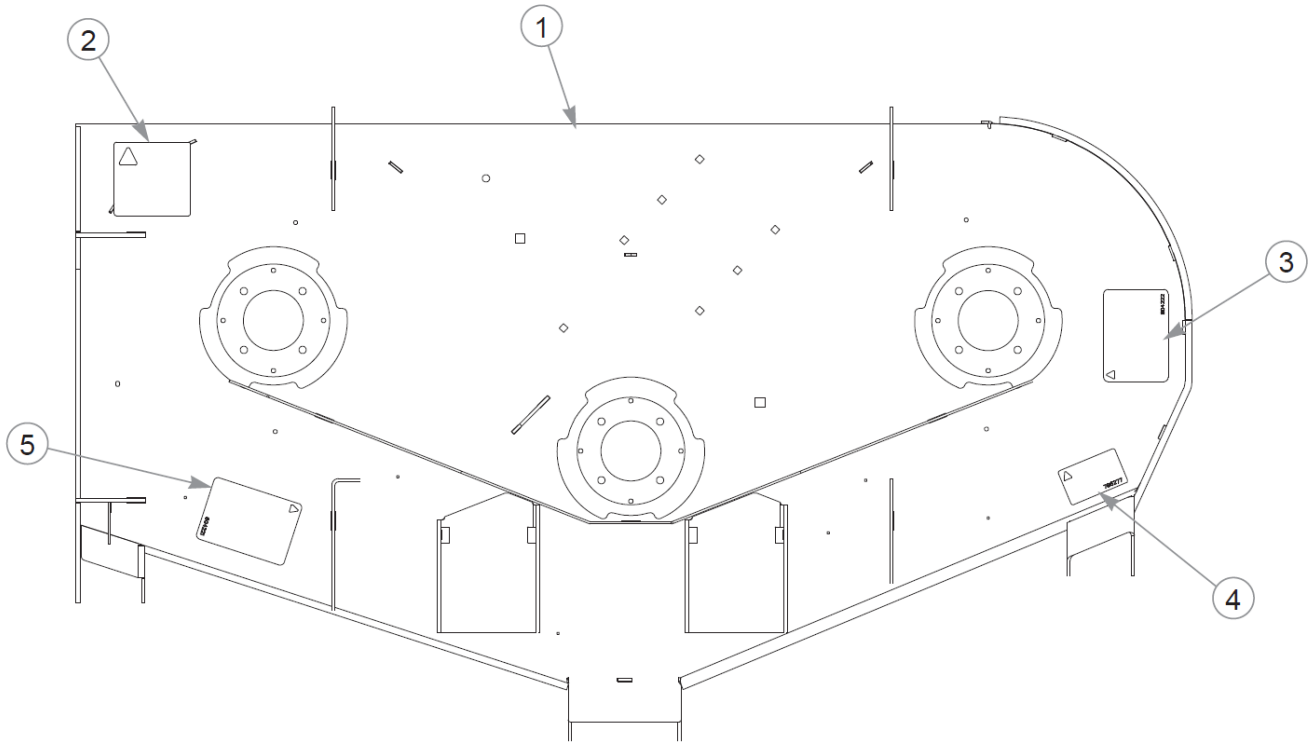
1
2
3
4
5

Item	Part No.	Qty	Name
1	552874	1	60" SERVICE DECK
2	781419	1	DECAL, BELT ROUTING
3	604222	1	DECAL, DANGER / OBJECTS
4	786277	1	DECAL, 60 DECK ID
5	604221	1	DECAL, DANGER / CHUTE

Comments for Page: 60" Service Deck

1. The deck includes the decals.

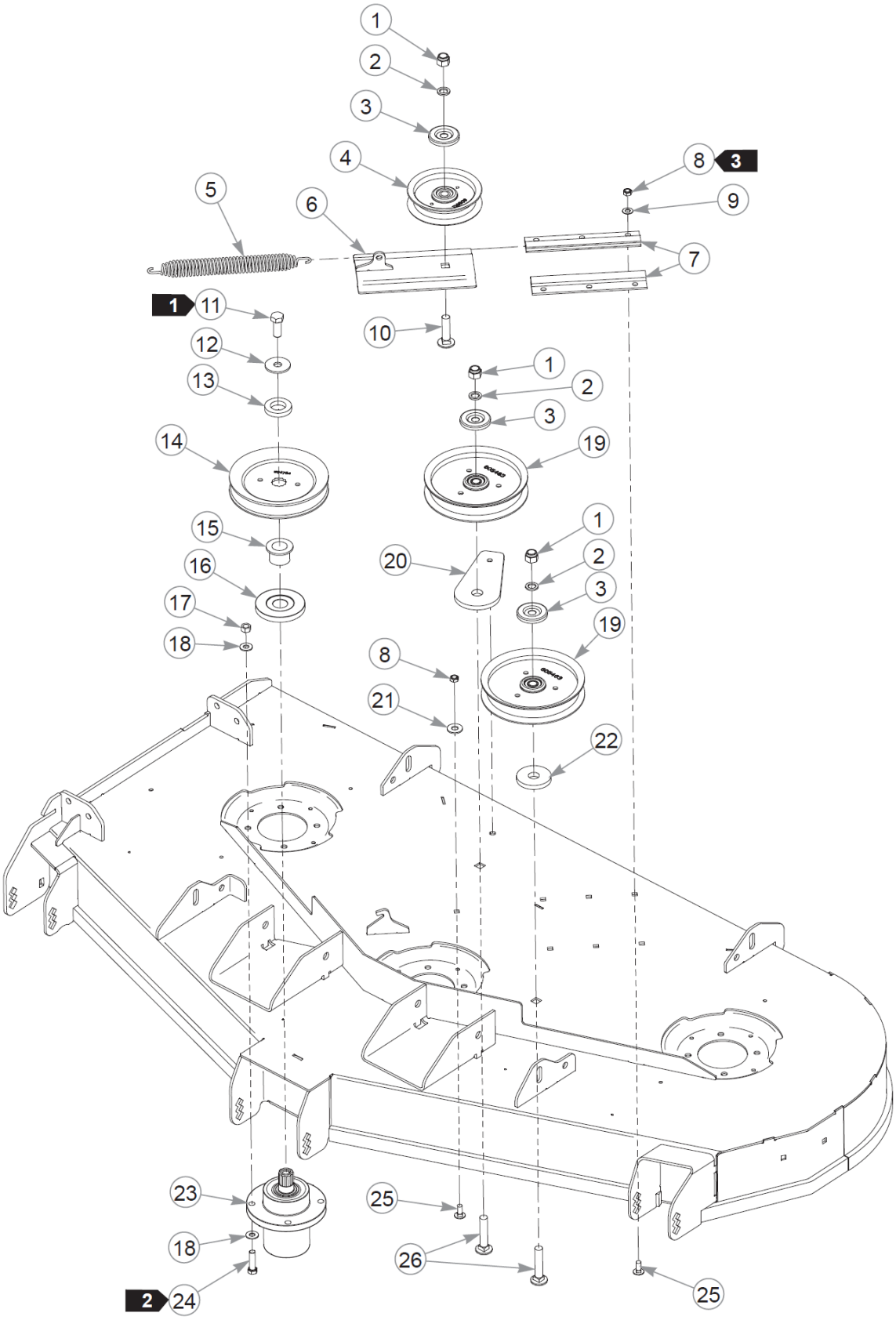
1
2
3
4
8
3
5
6
9
7
1
11
10
12
13
1
2
3
14
19
15
1
20
2
16
3
17
19
18
8
21
22
23
25
18
26
2
24
25

Item	Part No.	Qty	Name
1	781567	3	NT .500-13NLG5
2	604486	3	FW .531X.812X.089 HD
3	605467	3	DUST SHIELD
4	605512	1	4" IDLER PULLEY
5	607616	1	SPRING, DECK IDLER
6	121052	1	SLED, TENSIONER
7	604790	2	IDLER SLIDE, EXTRUDED
8	604251	7	NT .312-18 HXNL JAM G2ZN
9	604252	6	FW .340X.68X.04 ZN
10	604253	1	CB .50-13 X 2.00 STD ZN
11	705954	3	CS .500-13X1.25 HX G5 ZN
12	798603	3	FW .515X1.65X.12 HD ZN
13	604777	3	SPINDLE SPACER
14	604704	3	PULLEY, DECK DRIVE B-SEC
15	605504	3	SPACER, PULLEY
16	606362	3	DUST SHIELD
17	054502	12	NT .375-16HXG5
18	767954	24	FW 0.379X.82X.06 HD ZN
19	605463	2	6.00" IDLER PULLEY
20	605465	1	BASE, IDLER PULLEY MOUNT
21	017129	1	FW .440X1.00X0.08 ZN
22	605508	1	FW .73X2.25X.31 ZN
23	605380	3	SPINDLE ASSY, 12PT
24	005116	12	CS .375-16X1.38 HX G5 ZN
25	016253	7	CB .312-18X .750 FUL ZN
26	604254	2	CB .50-13 X 2.50 STD ZN

Comments for Page: 60" Deck Pulleys & Spindles

1. Torque to 73 ft-lbs.
2. Torque to 30 ft-lbs.
3. Torque to 3–6 ft-lbs.

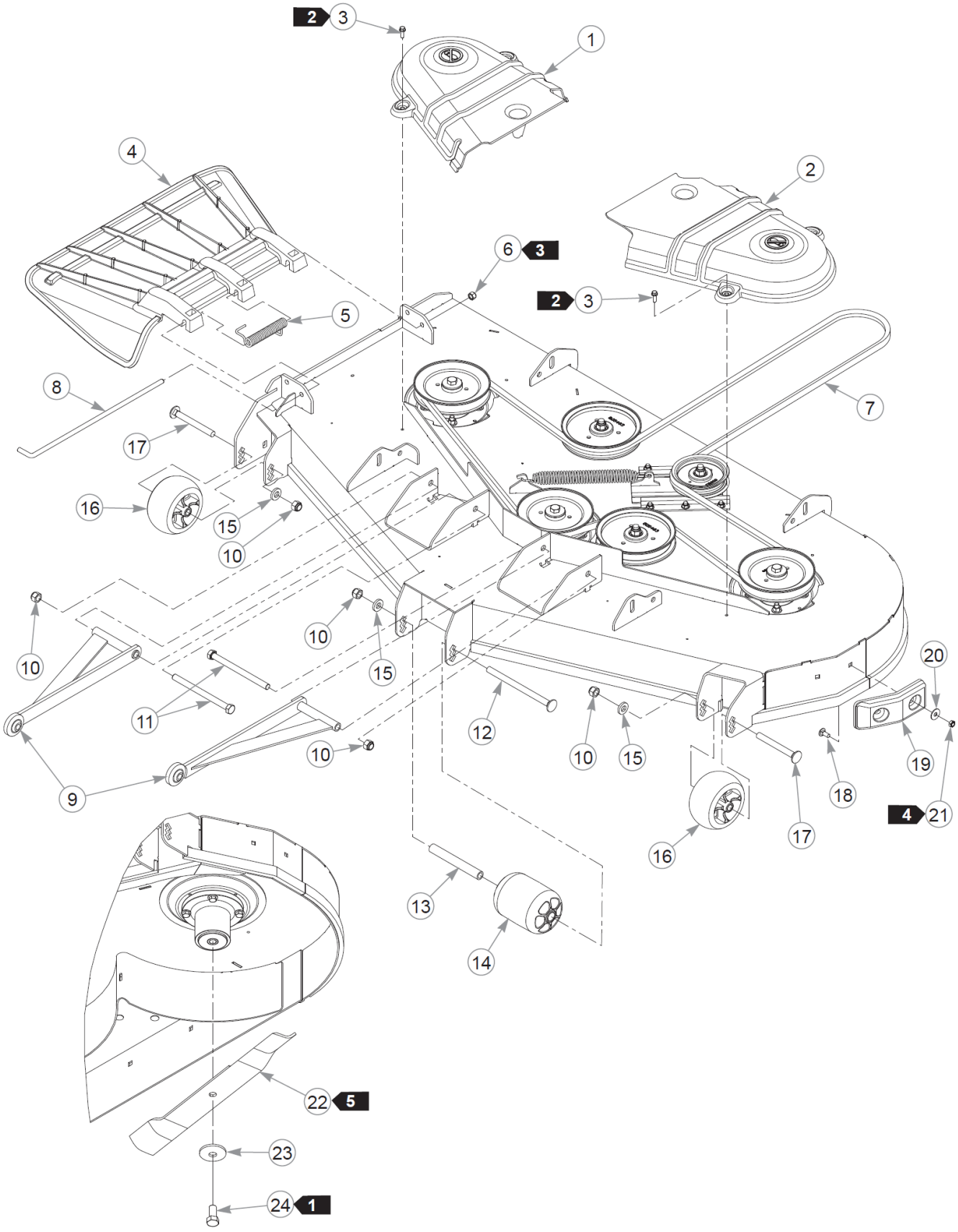
2 3
1
4
2
6 3
2 3
5
8
7
17
16
15
10
10
10
15
20
11
12
10
15
19
18
9
4 21
16
17
13
14
22 5
23
24 1

Item	Part No.	Qty	Name
1	604722	1	PULLEY COVER, RIGHT SIDE
2	604723	1	PULLEY COVER, LEFT SIDE
3	604324	4	CS .250-20 X .75 HX FLG
4	605469	1	DISCHARGE CHUTE
5	602435	1	SPRING, TORSION
6	086660	1	NT .375-16NLG8
7	605510	1	DECK BELT
8	602432	1	PIN, CHUTE
9	113717	2	PULLER W/A 14.53" C/C
10	781567	5	NT .500-13NLG5
11	042630	2	CS .500-13X6.500HXG5
12	602338	1	CB .50-13 X 7.50 STD ZN
13	602344	1	SPACER, ANTI- SCALP 5.73
14	602341	1	WHEEL, ANTI-SCALP
15	767962	3	FW .531 x 1.063 x .175
16	604780	2	WHEEL, ANTI-SCALP
17	602339	2	CB .50-13 X 4.50 STD ZN
18	016253	2	CB .312-18X .750 FUL ZN
19	605376	1	DECK BUMPER
20	079210	2	FW 0.344X1.0X0.06 ZN
21	604251	2	NT .312-18 HXNL JAM G2ZN
22	606253	3	BLADE, 20.5"-H-F-CW
Not Shown	600901	3	BLADE, F20.50"-L-F-CW
Not Shown	794214	3	BLADE,20.50"-MUL-F-CW
Not Shown	794230	3	BLADE,20.50"GAT-F-CW
Not Shown	793794	3	BLADE,20.50"-L-F-CW
23	782474	3	CW .678 X 2.250 X .187
24	781872	3	CS .625-11X1.250HXG5

Comments for Page: 60" Deck

1. Torque to 118 ft-lbs.

2. Torque to 2–5 ft-lbs on these self-tapping screws.

3. Do not torque; the discharge chute must pivot freely.

4. Torque to 3–6 ft-lbs.

5. These blades are approved for use with Catcher 606045:

606253 BLADE, 20.5"-H-F-CW

794214 BLADE, 20.5"-MUL-F-CW

793794 BLADE, 20.50"-L-F-CW

This page intentionally left blank

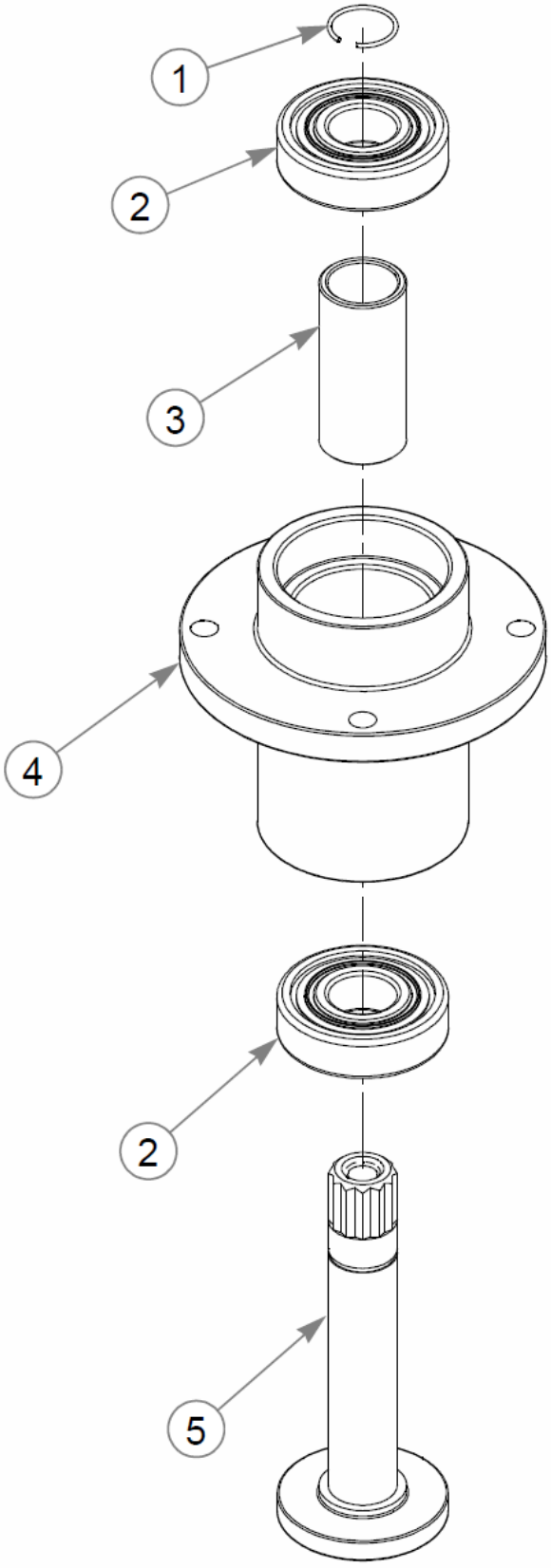
1
2
3
4
2
5

Item	Part No.	Qty	Name
1	783548	1	RING, BLADE SPINDLE RET
2	783555	2	BEARING, BLADE SPINDLE
3	783530	1	SPACER, BLADE SPINDLE
4	783514	1	HOUSING, BLADE SPINDLE
5	605381	1	SHAFT, SPINDLE, CONSUMER

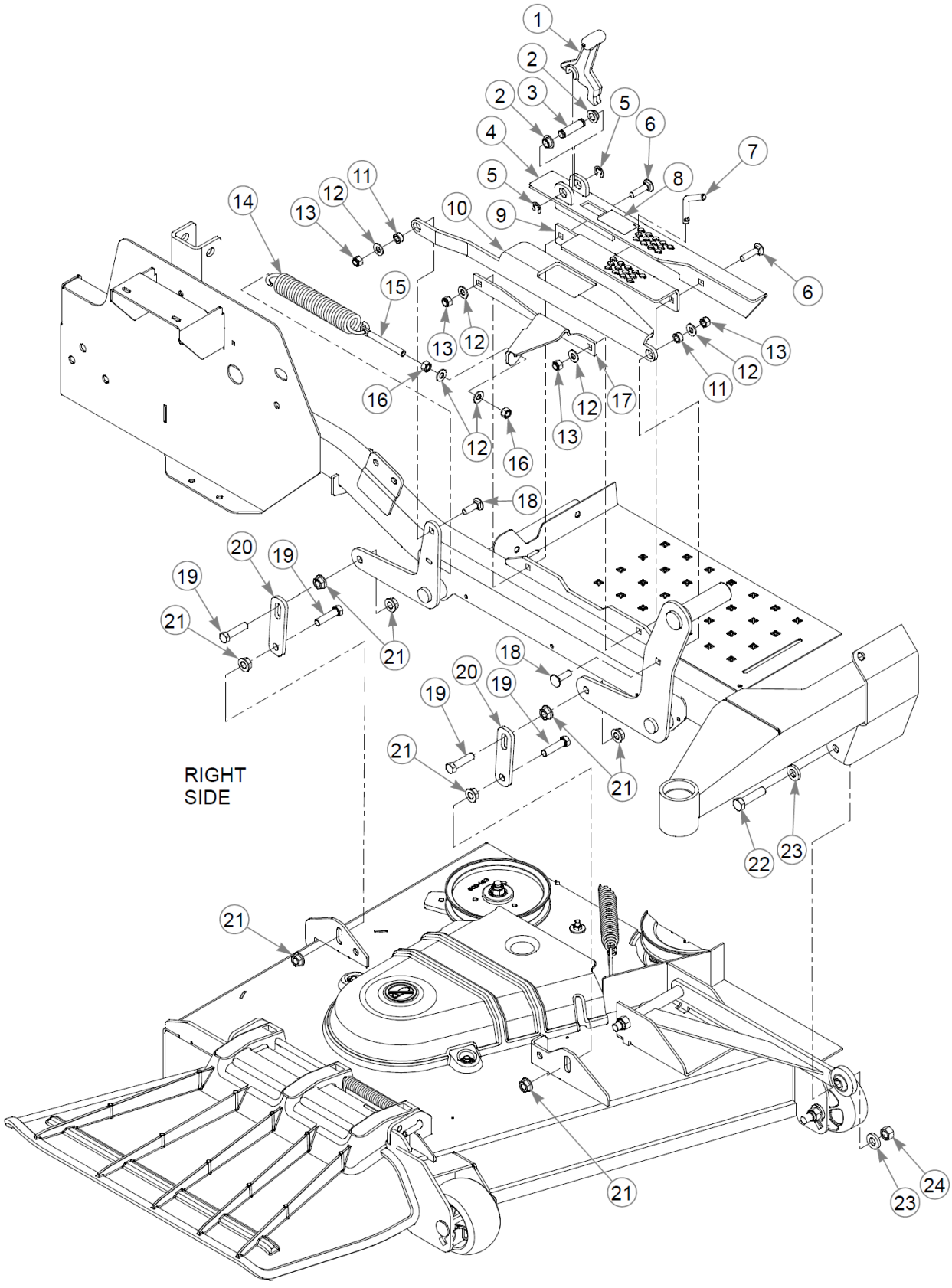
RIGHT
SIDE

Item	Part No.	Qty	Name
1	605466	1	TRANSPORT LATCH
2	768259	2	BUSHING,IGUS#0810 (FS)
3	605470	1	CE .500X2.00X1.63
4	552859	1	INDICATOR PLATE
5	793059	2	CLIP E,(1/2").80X.396X.
6	710194	2	CB .375-16X 1.50 STD G5
7	601963	1	PIN, DECK HEIGHT STOP
8	605538	1	DECAL, DECK HEIGHT
9	119970	1	CUT HEIGHT BRKT, INNER
10	119969	1	INDICATOR BRACKET
11	118900	2	SPACER, DECK LIFT LINK
12	767954	6	FW 0.379X.82X.06 HD ZN
13	086660	4	NT .375-16NLG8
14	008938	1	TENSION SPRING-PLATED
15	601486	1	EB, .375-16X3.00 FULTHD
16	054502	2	NT .375-16HXG5
17	120779	1	ASSIST SPRING BRKT
18	603113	2	CB .375-16X1.250 G5 ZN
19	055749	8	CS .437-14X1.750HXG5
20	124354-1	4	DECK LIFT LINK
21	704643	16	NT .437-14FLKG5
22	078949	2	CS .500-13X2.000 FUL HX
23	767962	4	FW .531 x 1.063 x .175
24	008193	2	NT .500-13HXG5

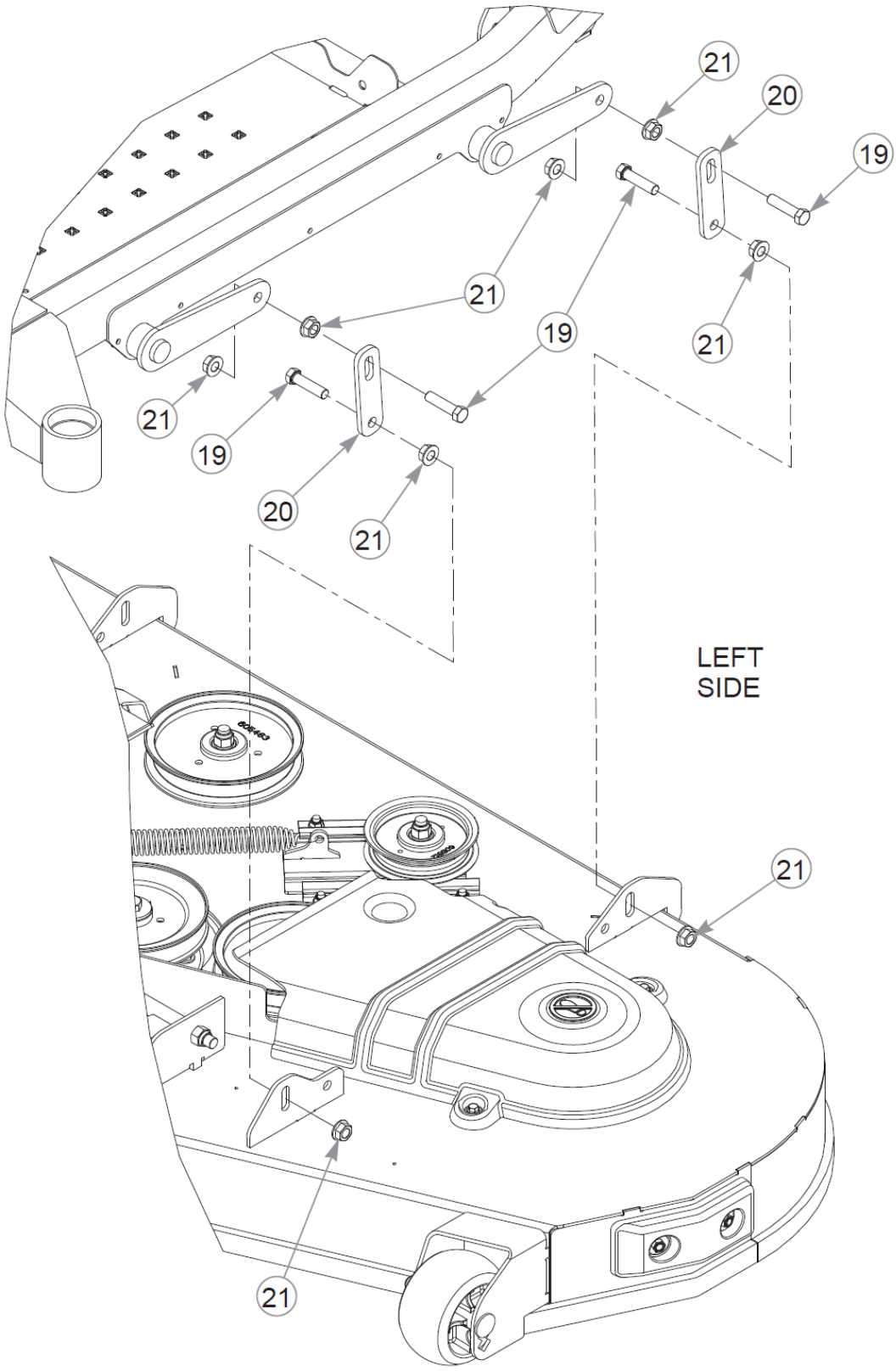
21
20
19
21
19
21
21
19
20
21
LEFT
SIDE
21
21

Comments for Page: Deck Lift & Deck Height (Multi-Page)

1. 552859 (indicator plate) includes the decal.

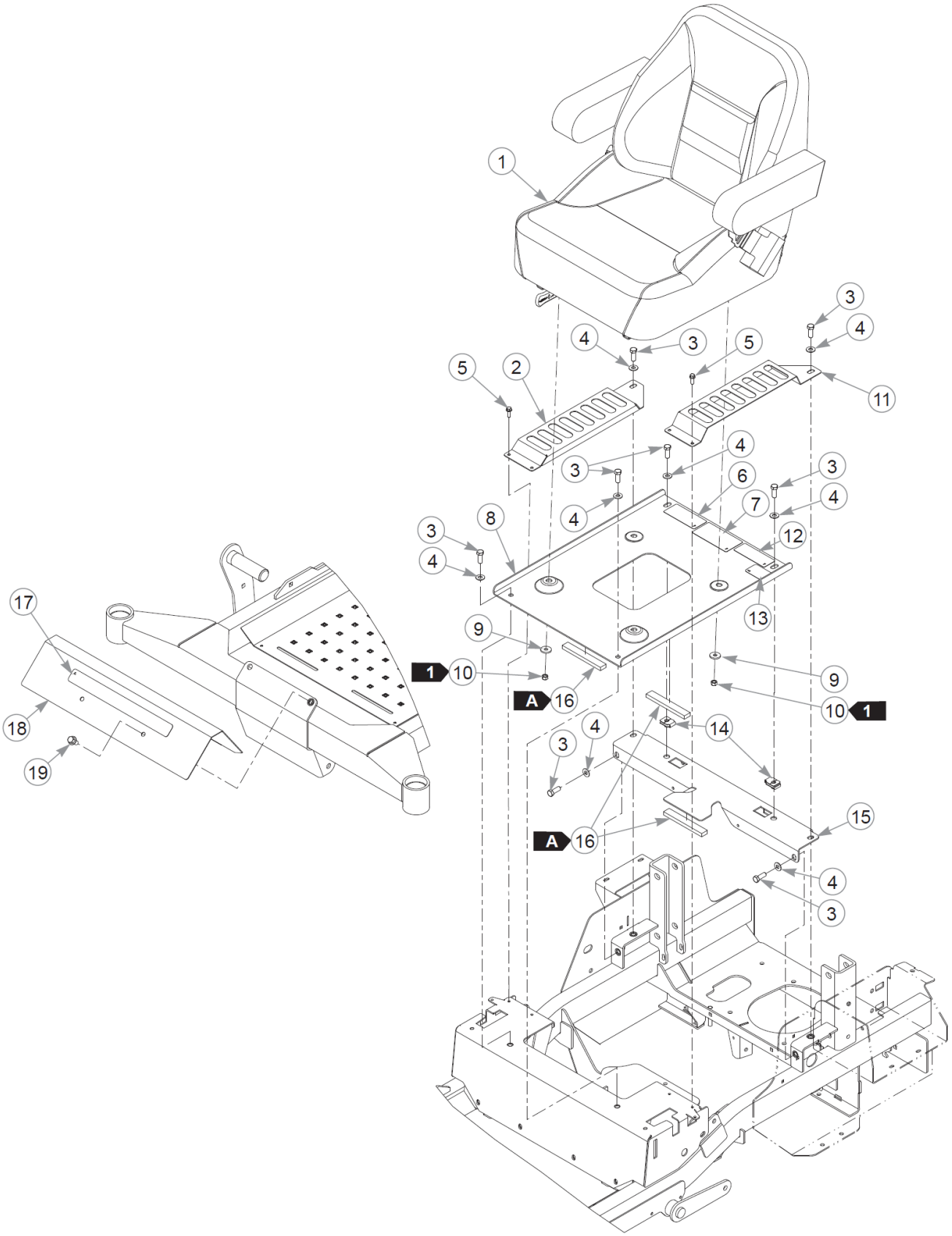
1
2
3
4
5
6
7
8
9
10
11
12
13
14
15
16
17
18
19
A
1

Item	Part No.	Qty	Name
1	605812	1	SEAT W/ ISOLATOR
Not Shown	606474	1	SEAT
Not Shown	605566	1	SEAT, 2 PIECE
2	121069	1	HYDRO GUARD, RH
3	036244	8	CS .375-16X1.00 HX G5 ZN
4	767954	8	FW 0.379X.82X.06 HD ZN
5	604324	4	CS .250-20 X .75 HX FLG
6	601967	1	DECAL, ENGINE COMPART
7	600899	1	DECAL, PUMP BELT WARNING
8	552853	1	SEAT PAN (WITH DECALS)
9	712927	4	FW 0.344X1.00X.12 HD ZN
10	058776	4	NT .312-18NLG5
11	121070	1	HYDRO GUARD, LH
12	779280	1	DECAL, HOT & HYD OIL
13	605782	1	DECAL, LEVEL FUEL BLOWM
14	601758	2	CN .375-16x.200 MAX THK
15	552848	1	SEAT SUPPORT (WITH TAPE)
16	713198	15"	SEAL 3/8x3/4 SOLD BY FT
17	602407	1	DECAL, HUSTLER ID
18	552856	1	FOOTREST (WITH DECAL)
19	029629	2	CS .375-16X0.75 HXF G5ZN

Comments for Page: Seat

SEAL LENGTH

A: 5.0"

1. Torque to 17 ft-lbs.

2. 605812 is used on mowers S/N 16020001 and higher.

605566 is used on mowers S/N prior to 16020001.

3. The seat pan and footrest include decals.

4. The seat support includes the seal.

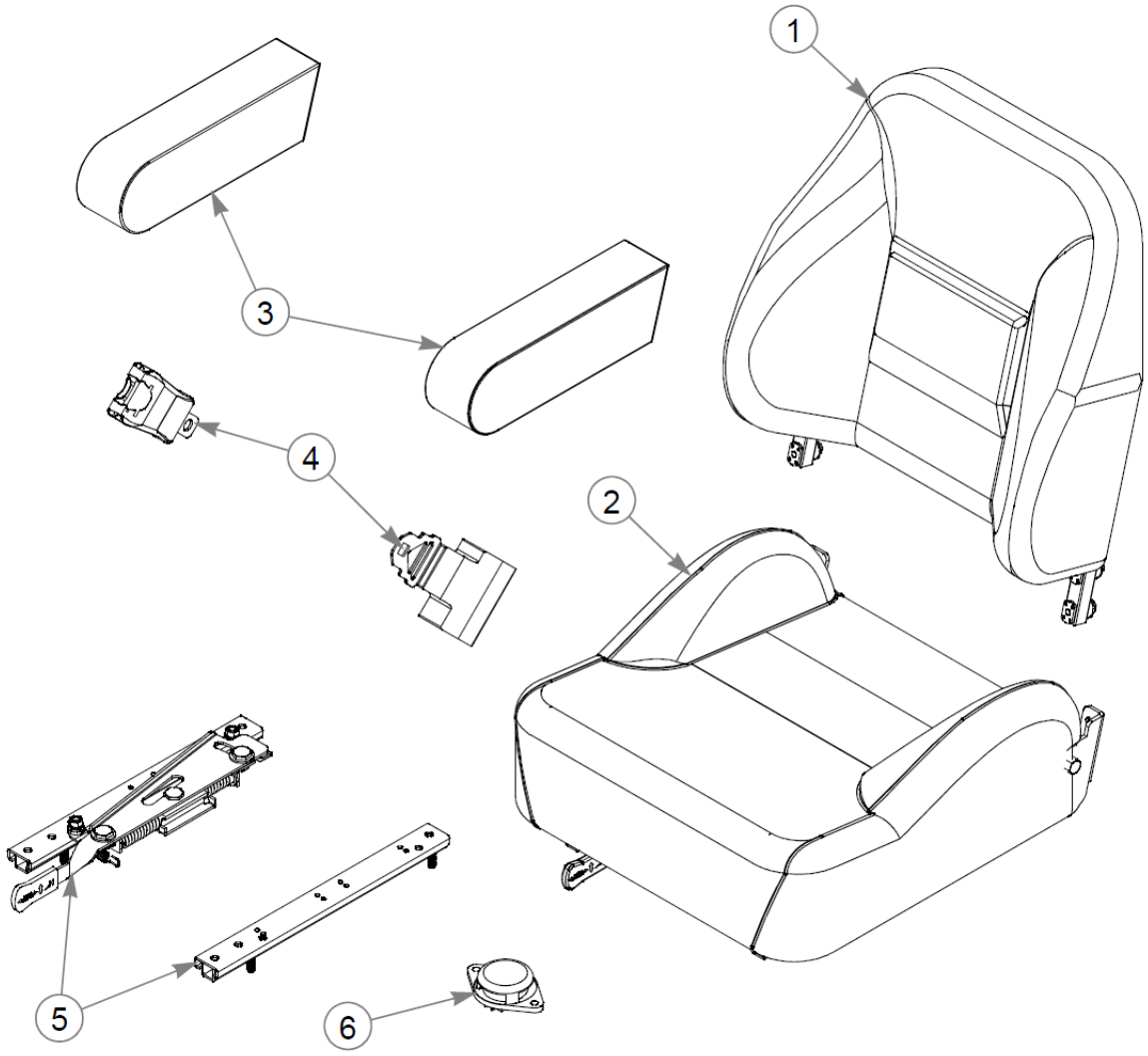
1
2
3
4
5
6

Item	Part No.	Qty	Name
Not Shown	605812	1	SEAT W/ ISOLATOR
1	605614	1	SVC SELL 605566 SEAT
2	605613	1	SVC SELL 605566 SEAT
3	605615	1	ARM REST (PAIR)
4	604945	1	SEAT BELT (SET)
5	122166	1	SEATKING ISOLATOR KIT
6	603148	1	N/O SEAT SWITCH

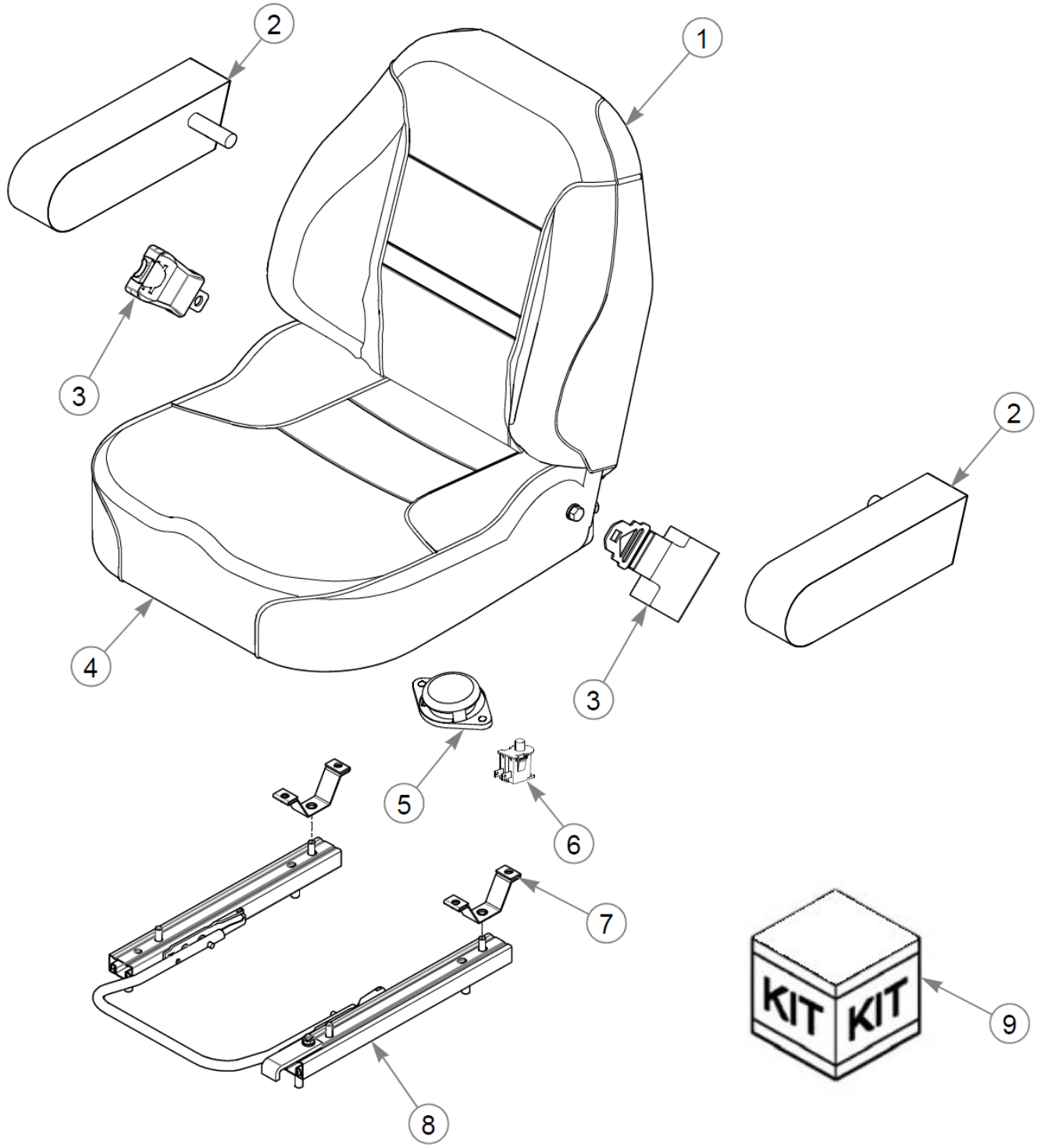
2
1
3
2
4
3
5
6
7
KIT
KIT
9
8

Item	Part No.	Qty	Name
Not Shown	606474	1	SEAT
1	606572	1	SVC, SEAT BACK COVER
2	605615	1	ARM REST (PAIR)
3	604945	1	SEAT BELT (SET)
4	606571	1	SVC, SEAT BOTTOM COVER
5	603148	1	N/O SEAT SWITCH
6	793315	1	SWITCH, SNAP MOUNT
7	606568	2	SVC, ISO MOUNT STRAP/SER
8	606570	1	SVC, SLIDE/ SERVICE ONLY
9	125091	4	SVC, ISO MOUNT KIT

Comments for Page: Seat Service Parts - 606474

1. 605615 (armrests) are shipped as a pair.

2. 604945 (seat belt) is shipped as a set.

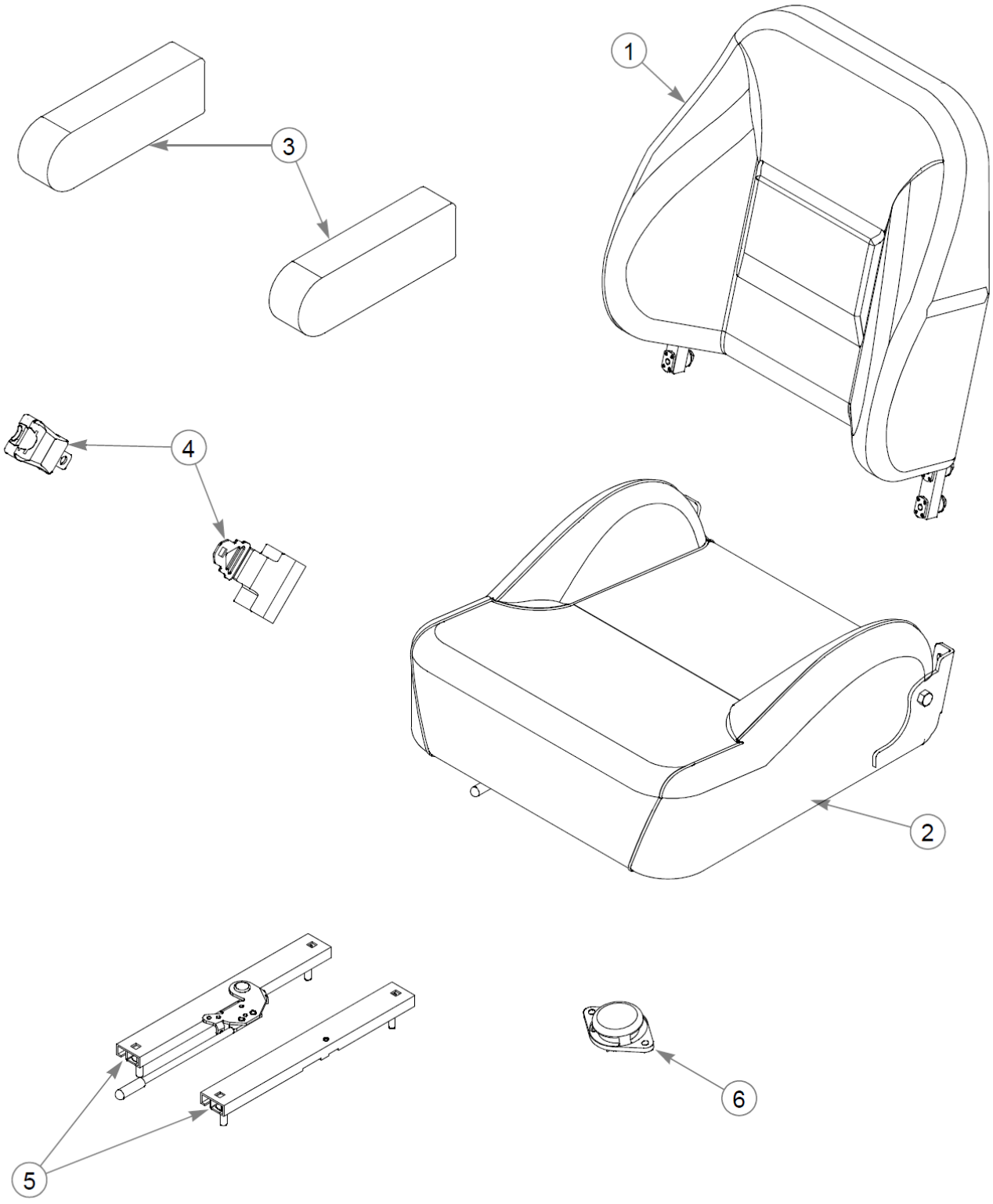
1
3
4
2
5
6

Item	Part No.	Qty	Name
Not Shown	605566	1	SEAT, 2 PIECE
1	605614	1	SVC SELL 605566 SEAT
2	605613	1	SVC SELL 605566 SEAT
3	605615	1	ARM REST (PAIR)
4	604945	1	SEAT BELT (SET)
5	604944	1	SEAT SLIDES (PAIR)
6	603148	1	N/O SEAT SWITCH

Comments for Page: Seat Service Parts - 605566

1. 605615 (armrests) are shipped as a pair.
2. 604945 (seat belt) is shipped as a set.
3. 604944 (slides) are shipped as a pair.

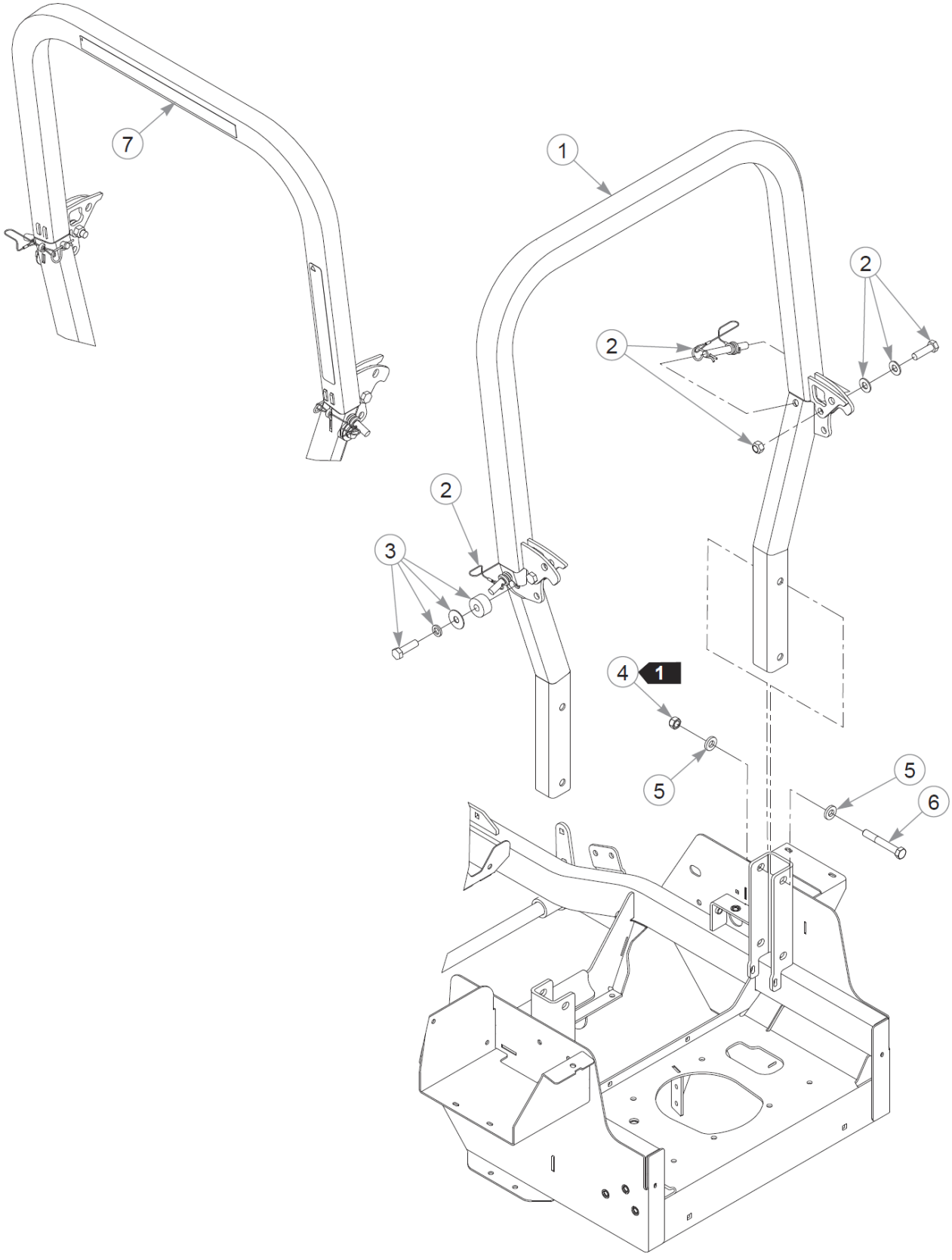
7
1
2
2
2
3
4
1
5
5
6

Item	Part No.	Qty	Name
1	605479	1	ROPS ASSY
2	605044	1	KIT, ROPS HARDWARE
3	605646	2	KIT, POLY STOP (PAIR)
4	023317	4	NT .500-13UNTG8
5	767962	8	FW .531 x 1.063 x .175
6	061812	4	CS .500-13X3.50 HX G5 ZN
7	605691	1	DECAL, COMMERCIAL DUTY

Comments for Page: ROPS

1. Torque to 73 ft-lbs.