STOWAWAY®

SIDE LOADER

Tailgates By THIEMAN

SL15/20-6 AND SL15/20-10 OWNERS MANUAL/PARTS LIST

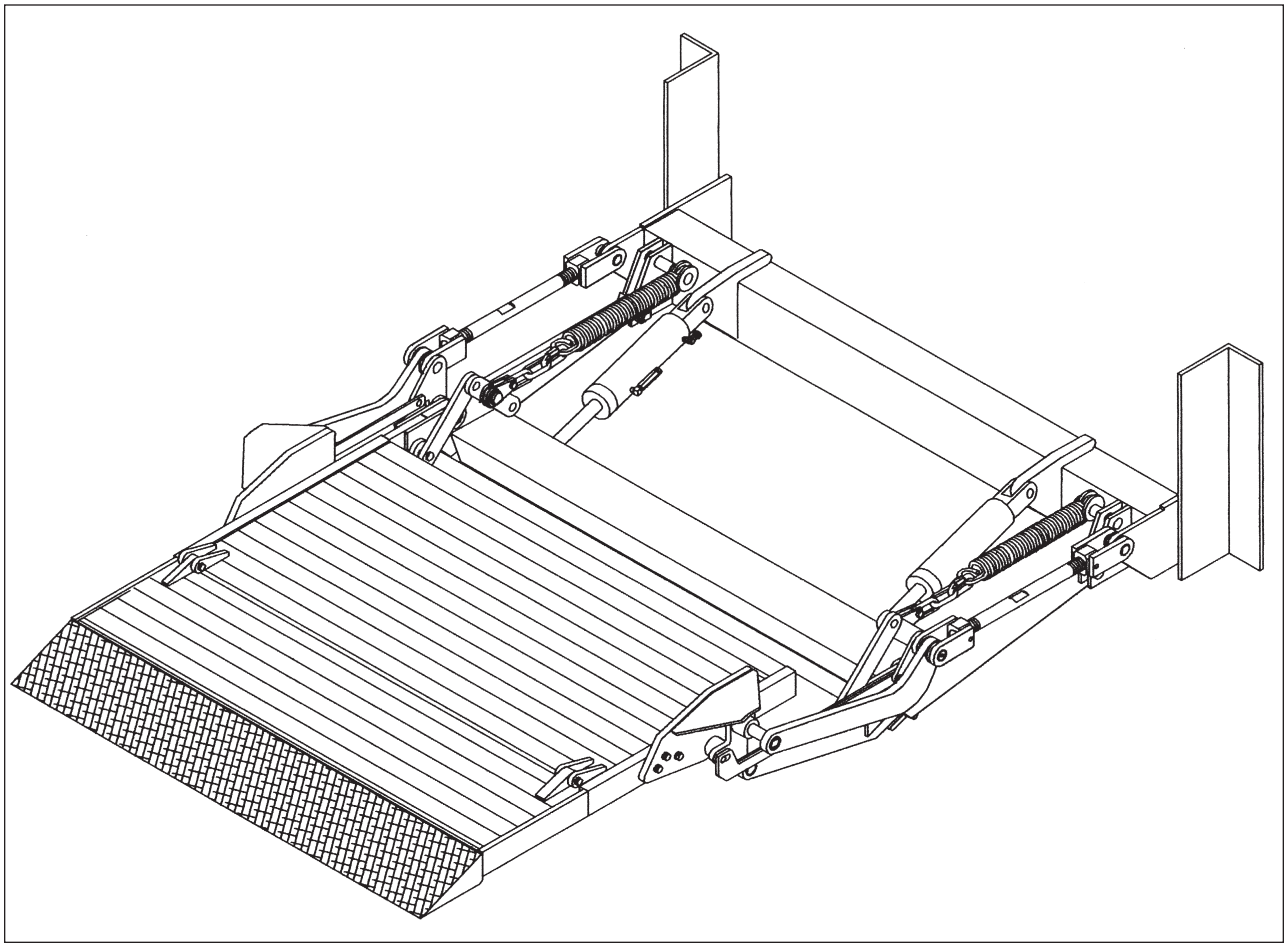

⚠ IMPORTANT! KEEP IN VEHICLE!

PLEASE READ AND UNDERSTAND THE CONTENTS OF THIS MANUAL BEFORE OPERATING THE EQUIPMENT.

NTEA
NATIONAL TRUCK EQUIPMENT ASSOCIATION
Member

THIEMAN
TAILGATES, INC.
600 East Wayne Street
Celina, Ohio 45822
Phone: 419-586-7727 Fax: 419-586-9724

TABLE OF CONTENTS

PARTS ORDERING PROCEDURE 2

WARNINGS 3

OPERATING INSTRUCTIONS. 4

MAINTENANCE GUIDE. 5

SEMI-ANNUAL INSPECTION 6

ELECTRICAL PICTORIALS 6

INSPECTION AND LOCATION OF DECALS. 7

PLATFORM ASM 8

PUMP ASM -TOGGLE CONTROL. 9

TRUNNION, LIFT ARM, AND IDLER ARM ASM-10”. 10,11

TRUNNION, LIFT ARM, AND IDLER ARM ASM-6”. 12,13

FOR YOUR RECORDS

Model No. _____ **Date Purchased** _____

Serial No. _____

NOTE: WHEN ORDERING PARTS BE SURE TO INCLUDE THIS INFORMATION!

PARTS ORDERING PROCEDURE

When ordering parts, please include all the information asked for below. If this information is not available, a complete written description or sketch of the required part will help Thieman identify and deliver the needed part to you.

THE FOLLOWING INFORMATION MUST BE INCLUDED:

1. Serial Number - Thieman liftgate serial numbers can be found on the tag located on the front side of the trunnion tube.
2. Model Number and Capacity.
3. Platform size and Material - Steel or Aluminum.
4. Part number.
5. Description.
6. Quantity required.

WATER LEVEL LOADING

When a maximum load is to be raised or lowered, this load must be centered on the load bearing platform, both front to back and side to side.

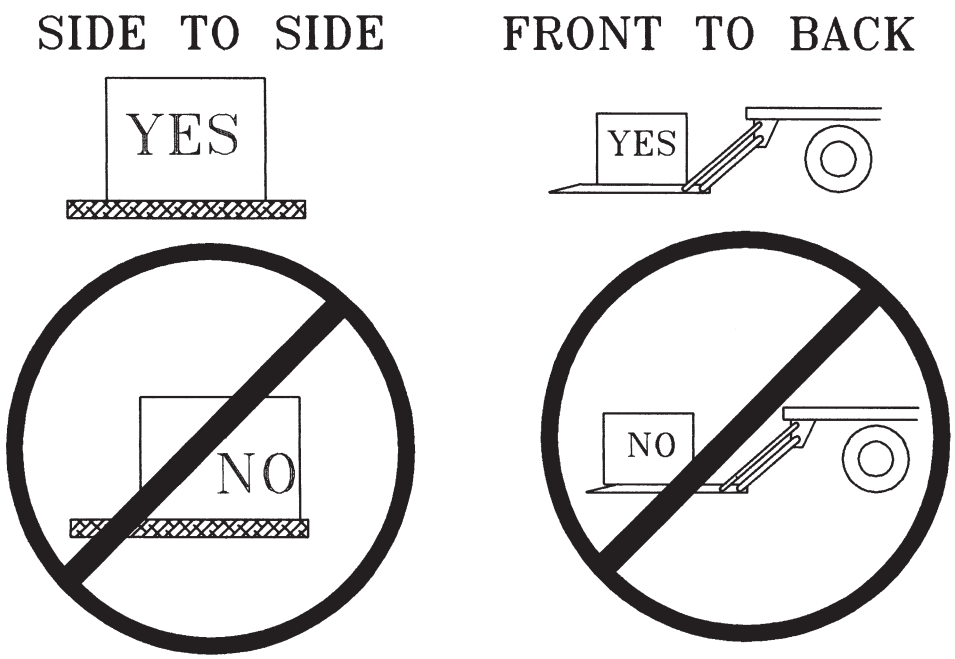

FIG.1

WARNING!

The following list of warnings are to be read before operating the SL series liftgate.

+ Read this Owner's Manual and all of the decals on the liftgate BEFORE operating the liftgate.
+ All protective covers and guards must be in place before operating the liftgate.
+ DO NOT operate the liftgate if you do not have a thorough knowledge and understanding of the operation of the liftgate.
+ NEVER OVERLOAD THE LIFTGATE. The maximum rated capacity of the SL series liftgate differs with each model as follows:

  SL15 - 1500lbs.
  SL 20 - 2000lbs.
+ Never use the liftgate if it makes any unusual noises, has vibrations, or fails to operate freely.
+ Make certain that the area below the platform is clear before and at all times during the operation of the liftgate.
+ Keep hands and feet clear of all pinch points.

+ The platform must be in the closed position and the transit chains attached properly before transit.
+ Always load as close to the center of the platform and as close to the vehicle as possible. See Figure 1.
+ Never operate lift trucks on or over any part of the platform.
+ Load and unload the platform from the rear and not from the side of the platform.
+ Only operate liftgate when vehicle is on level ground and the parking brake is set.
+ Follow the maintenance guide as outlined in this manual.
+ DO NOT attempt any repairs unless you are a qualified and authorized THIEMAN distributor.
+ If any repairs, adjustments, or maintenance not covered in this manual are required, contact your nearest Thieman distributor or the factory.
+ DO NOT modify this liftgate. Altering this liftgate may cause serious personal injury or damage the liftgate and will void all warranties.

OPERATING INSTRUCTIONS

Caution

Be sure to operate liftgate at a safe distance and never improperly load platform as this may cause personal injury or damage to the liftgate.

UNFOLDING OF PLATFORM

1. Raise platform by pushing the raise switch up until tension is removed from stow chains.
2. Unhook stow chains from lift arms.
3. Lower platform by pushing the lower switch until the platform is approximately 3/4 of the way to the ground.
4. Using platform handles, manually lift and pull platform until lift arms are fully extended.
5. Manually unfold platform extension and ramp.

RAISING OF PLATFORM

1. Push raise switch to raise platform to bed height.

LOWERING OF PLATFORM

1. Push lower switch to lower platform to the ground.

CLOSING OF PLATFORM

1. Raise platform approximately 6” from the ground.
2. Manually fold platform extension and ramp.
3. Using platform handles, manually lift and push platform into the folded position.
4. Raise gate into the stowed position.
5. Attach stow chains to lift arms.

MAINTENANCE GUIDE

The following inspection and maintenance operations should be performed at the recommended intervals or anytime the liftgate shows signs of abuse, and improper or abnormal operation.

MONTHLY INSPECTION AND MAINTENANCE

Operate the liftgate throughout its entire operational cycle and check the following:

1. Check that there are no unusual noises or vibrations.
2. Check platform height relative to bed height. If platform is lower, adjust cylinder with a 13/16 wrench to obtain the necessary height.
3. Check for apparent damage to the liftgate such as bent or distorted members, any cracked welds that may have resulted from overloading or abuse.
4. Check for excessive wear in the following areas:
   A. Platform hinge pins and bushings
   B. All cylinder pins, bolts, and bushings
5. Check that the platform pivot pins are in place and retained by their proper retainers.
6. Check that all protective covers and guards are properly in place and secured.
7. Check for oil leaks in these areas:
   A. Lift cylinder
   B. Hydraulic hose – replace if it shows signs of wear or cracking.
   C. Hydraulic fittings – tighten or replace as may be required to stop leakage.
8. Check the oil level in the pump reservoir. With the liftgate in the stowed position the oil should be within 1/2” from the top of the reservoir. See chart below for oil applications.
9. Check that all wiring and battery cable connections are tight and free of corrosion.
10. Lubrication of the SL series liftgate should be as follows for all user conditions:

Area of Tailgate	Type of Lubrication	Frequency
Pivot pins w/ zerk	Grease+	50 cycles
Pump oil change	see chart below	yearly

*Most of the pivot points on the SL have special bushings that do not require lubrication.
+See the parts list for the location of the grease zerks.
For -40 to 120 F use #0 Grade grease.
For -20 to 200 F use #1 Grade grease.

HYDRAULIC FLUID CHART

Temperature Range	Acceptable Fluids
-20 to 130 F	Dexron III Exxon Superflo ATF Shell Donax TG
-50 to 80 F	Shell Aero Fluid 4 Mobil Aero HFA Exxon Univis J-13 MIL H-5606
-75 to 165 F	Exxon Univis J-26

11. Check the pump relief pressure and also the motor amperage at this pressure. These values should be as follows:

Model	Max Amp Draw	Relief Pressure (psi)
SL-15	170	1850
SL-20	190	2450

Semi-Annual Inspection

1. Perform the procedures outlined in the Monthly Inspection and Maintenance.
2. Inspect pump motor by:
   A. Disconnecting battery cable
   B. Remove motor end cover
   C. Examine the armature brushes for wear. (Brushes should be replaced if they are less than 1/8” long.)
   D. Clean all residue out from inside of the motor housing.
   E. Apply several drops of light weight machine oil to the armature shaft bearing in the motor end cover and reassemble the motor end cover.
3. If the hydraulic oil in the reservoir is dirty:
   A. Unfold platform and lower platform to the ground. Raise platform to bed height so cylinders are fully retracted. Support the platform in this position with a lift truck or crane.
   B. Drain the oil from the hydraulic system and flush the entire system.
   C. Remove reservoir from pump and clean suction line filter. Also clean out any contaminants inside reservoir. Remount reservoir when completed.
   D. Replace the oil as outlined in Section 9 under Monthly Maintenance and Inspection.

ELECTRICAL PICTORIAL

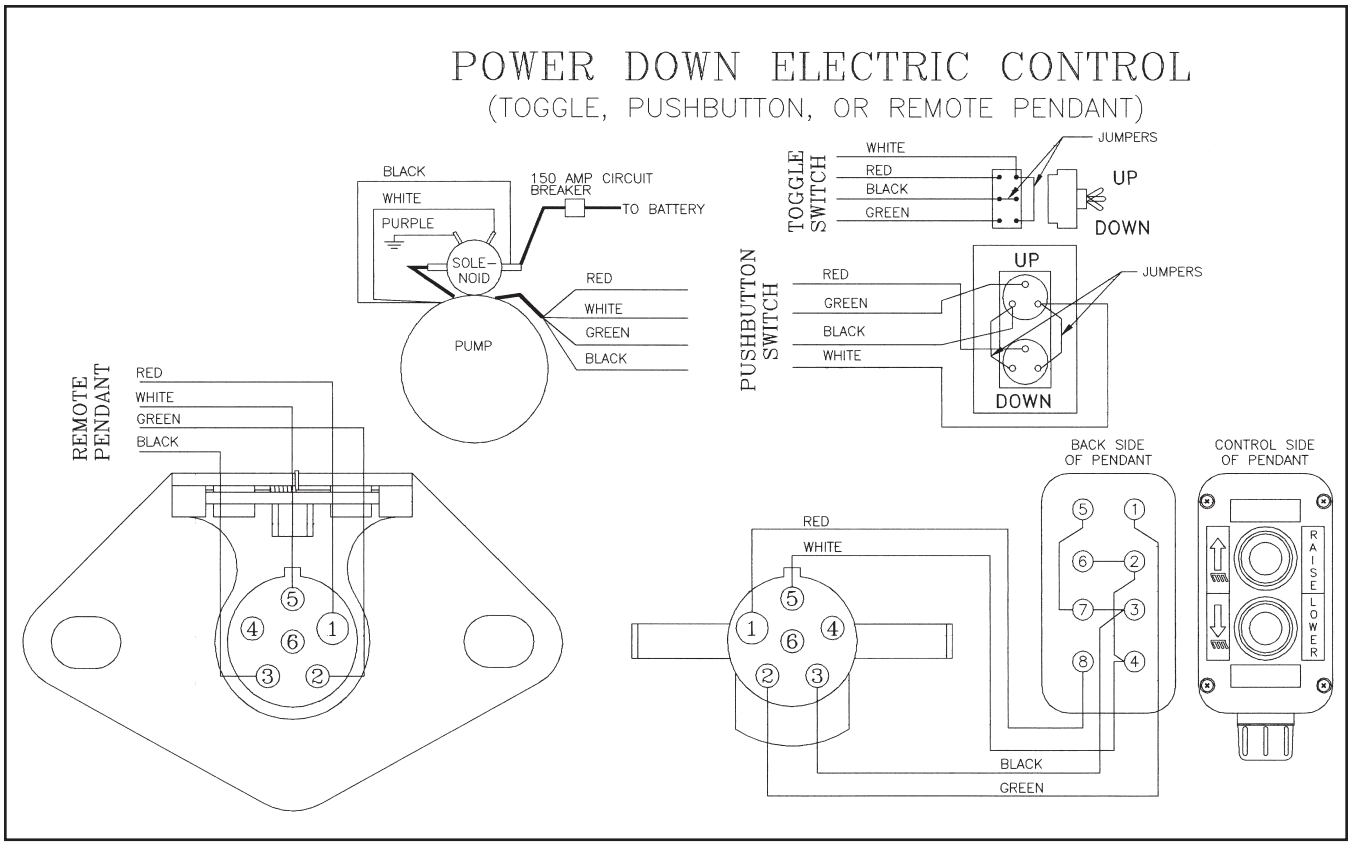

INSPECTION AND LOCATION OF DECALS

Item	Part Name	Part Number
1	Warning Decal-off center	4671050
2	Fast Idle Decal	4650150
3	Danger Decal-no riding	4609
4	Operating Decal	4608
5	Capacity Decal-1500#	4650070
5	Capacity Decal-2000#	4650100
6	Warning Decal-pinch point	4604
7	Handle decal	4605
8	Wiring Decal	4614
9	Urgent Warning	4650530
10	Warning Decal-High Pressure	4620
11	Caution Decal	4650770

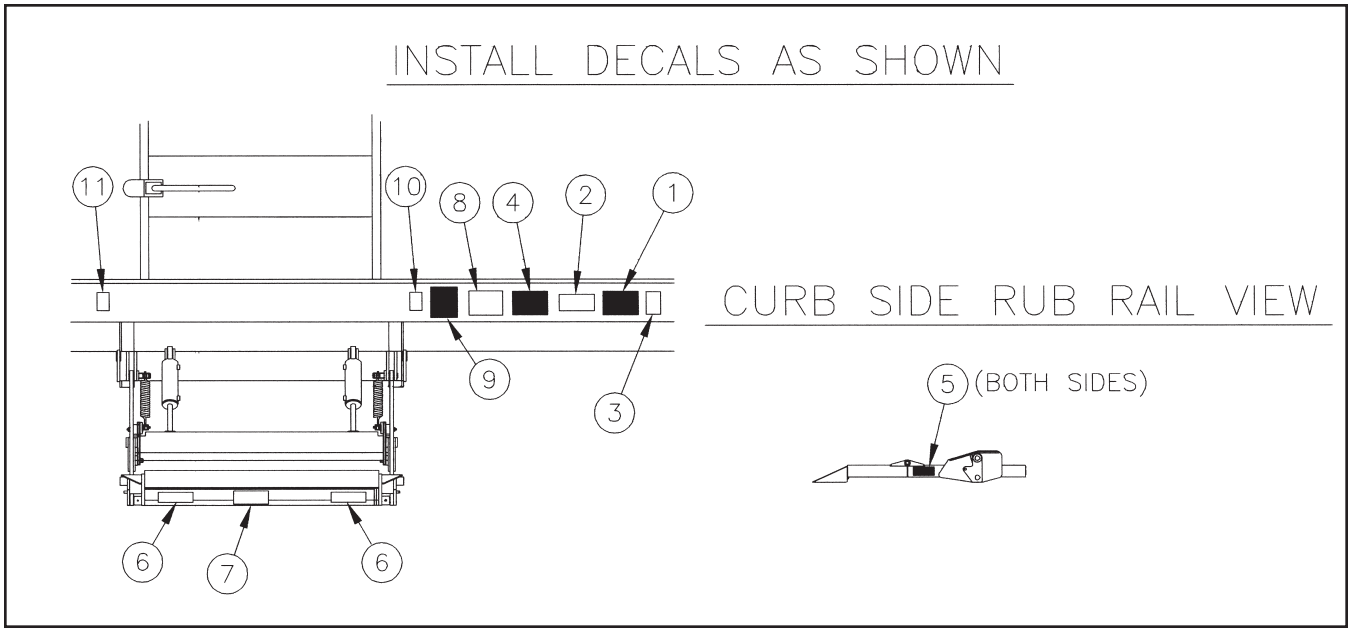

PLATFORM ASSEMBLY

Item	Part Number	Description	Qty
1	3406	Platform Asm-incl 2 to 5	1
2	31023	Platform main section	1
3	31024	Platform extension	1
4	5056	Pin	2
5	5781001	Retaining ring	4
6	31020-002	Platform hinge RH	1
7	31020-001	Platform hinge LH	1
8	8120382	Lockwasher .38	12
9	8108-001	Screw .38-16 x 1.75 S.S.	12
10	8107-011	Washer .62	2

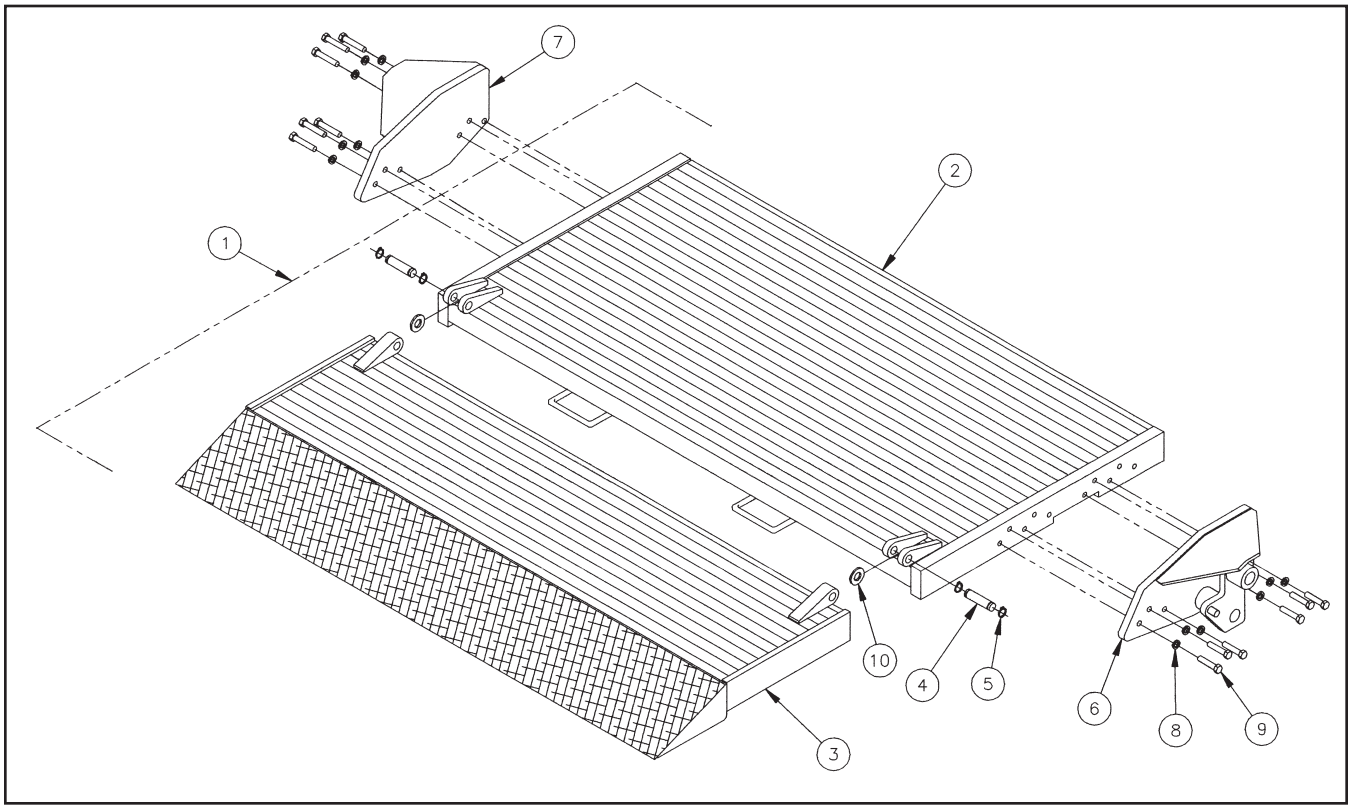

PUMP ASSEMBLY

Item	Part Number	Description	Qty
1	4404	EST Pump Asm-incl 2 to 5	1
2	4421420	Pump bracket	1
3	4420409	Breather Cap	1
4	4423520	Motor 8111	1
5	4447	Solenoid	1
6	4301770	Circuit Breaker-150A	1
7	5765	Cover	1
8	5700100	Strap	1
9	4900000	.25 Swivel elbow	4
10	4965020	Hose 51.00	2
11	4900540	Restrictor elbow	2
12	4318-002	Battery Cable #2x2'	1
13	5781008	Retaining ring	4
14	5009	Pin	2
15	31061	Cylinder 3 x 6	2
16	4300030	Battery cable #2 x 25'	1
17	4350	Cable lug	1
18	5701260	Cable retainer	4
19	8180126	Screw .38-16 x 1.50	5
20	8106-010	Internal Tooth Lockwasher .38	10
21	8120377	Nut .38	5
22	8120388	Flatwasher .38	4
23	5702360	Toggle cup	1
24	4301740	Toggle switch	1
25	4965015	Hose 84.00	2
26	4900290	Dual Swivel Elbow	2
27	5702371	Spring pin	2
28	5024	Pin	2
29	4319-001	Heat Shrink	1
30	4301750	Toggle Seal	1
31	5793010	Self Tap Screw .25 x .75	3
32	4422860	Pushbutton control	1
33	31057	Pump Mtg. Bracket	1
34	4318-002	Ground Cable #2 x 2'	1
35	8104-006	Screw .31 x 1	1

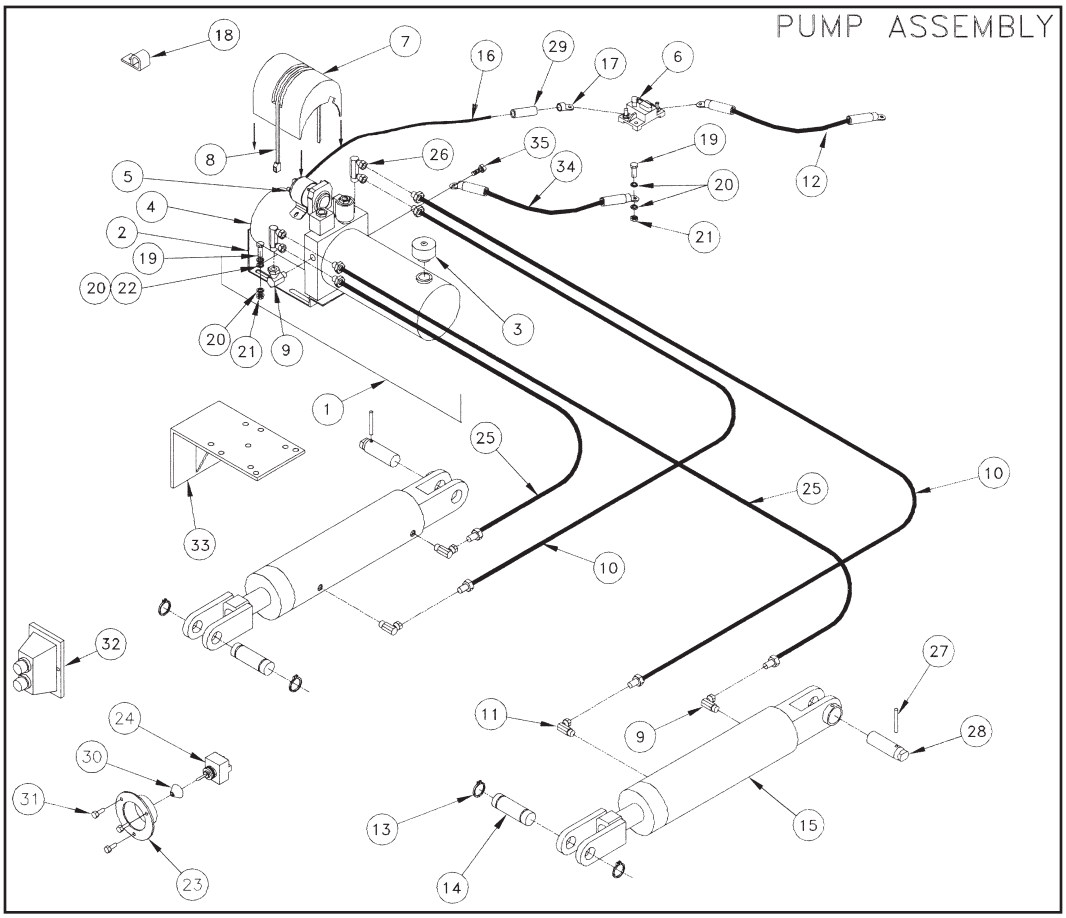

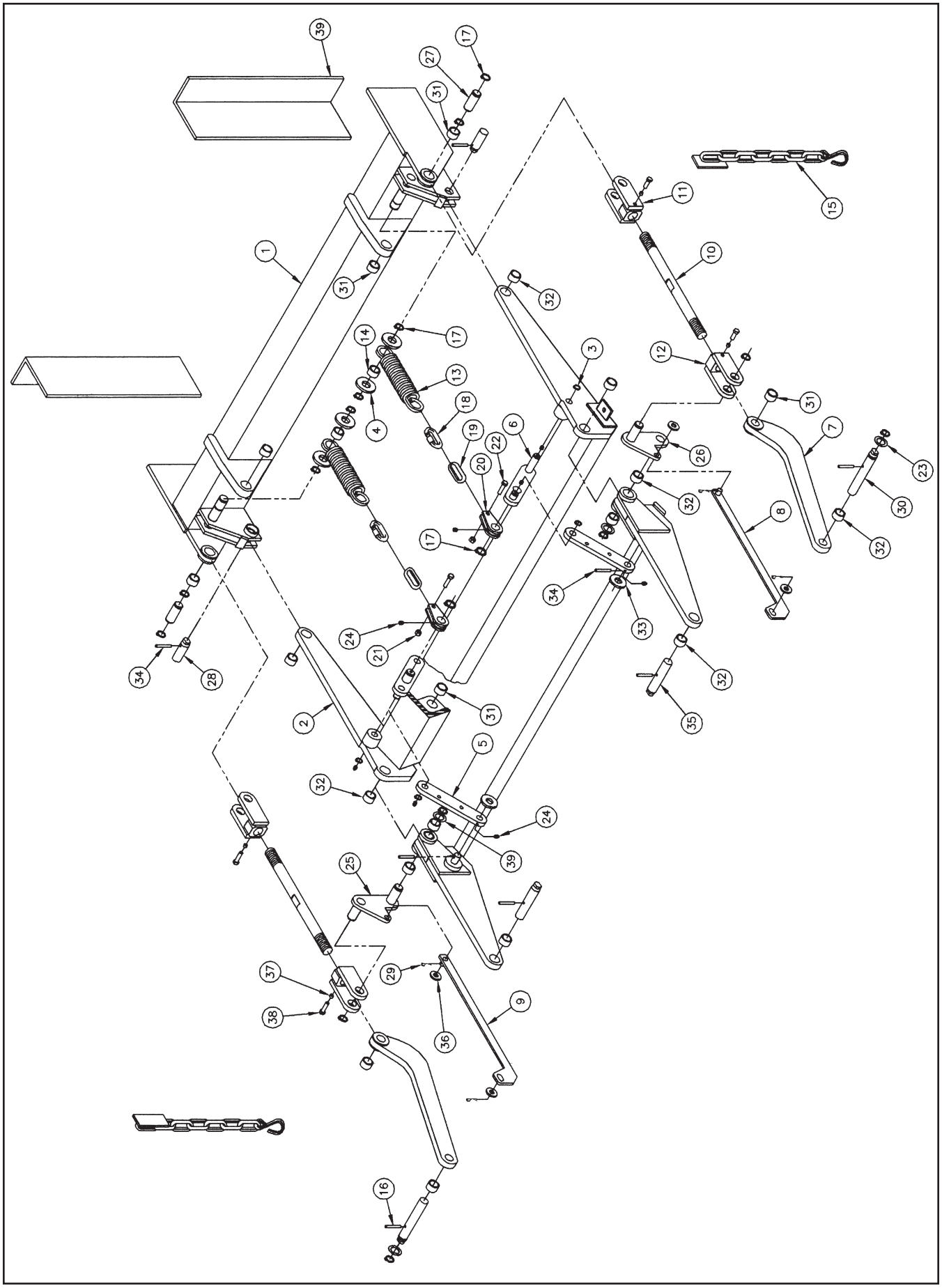
39
17
27
31
1
31
11
15
10
32
14
17
13
3
12
4
18
19
6
22
20
26
31
7
23
30
32
8
32
17
34
33
24
21
34
28
32
35
2
31
5
32
24
39
25
37
29
38
36
9
16

TRUNNION, LIFT ARM, & IDLER ARM ASM-10”

Item	Part Number	Description	Qty
1	31046	Trunnion asm	1
2	31028	Lift arm asm	1
3	5781015	Retaining ring	4
4	8107-010	Flatwasher 1.00	4
5	2125	Lower folding link	2
6	31022	Folding link	2
7	31059	Idler arm	2
8	3110-002	Strap weld RH	1
9	3110-001	Strap weld LH	1
10	5019	Adjustment rod	2
11	31374	Clevis LH thread	2
12	31373	Clevis RH thread	2
13	5101120	Spring	2
14	5507-001	Bronze Bushing	2
15	3103751	Chain Asm	2
16	5708-001	Spring pin	4
17	5781008	Retaining ring	16
18	4100340	Chain Link	2
19	4100354	Chain-One Links	2
20	31211	Link Weld	2
21	9413534	Locknut .38	2
22	5793002	Screw .38 x 1.25	2
23	8107-008	Flatwasher 1.00	4
24	8271291	Zerk	8
25	31284-001	Leveling strap LH	1
26	31284-002	Leveling strap RH	1
27	5009	Pin	2
28	5024	Pin	2
29	8121222	Cotter Pin	4
30	5018	Pin	2
31	5504-001	Bushing	8
32	5504-005	Bushing	12
33	9429664	Flatwasher .75	2
34	5702371	Spring pin	4
35	5017	Pin	2
36	8120396	Flatwasher .50	4
37	4220240	Insert	4
38	8181635	Screw .38-24 x .75	4
39	2037000	4 x 6 x .38 angle	2

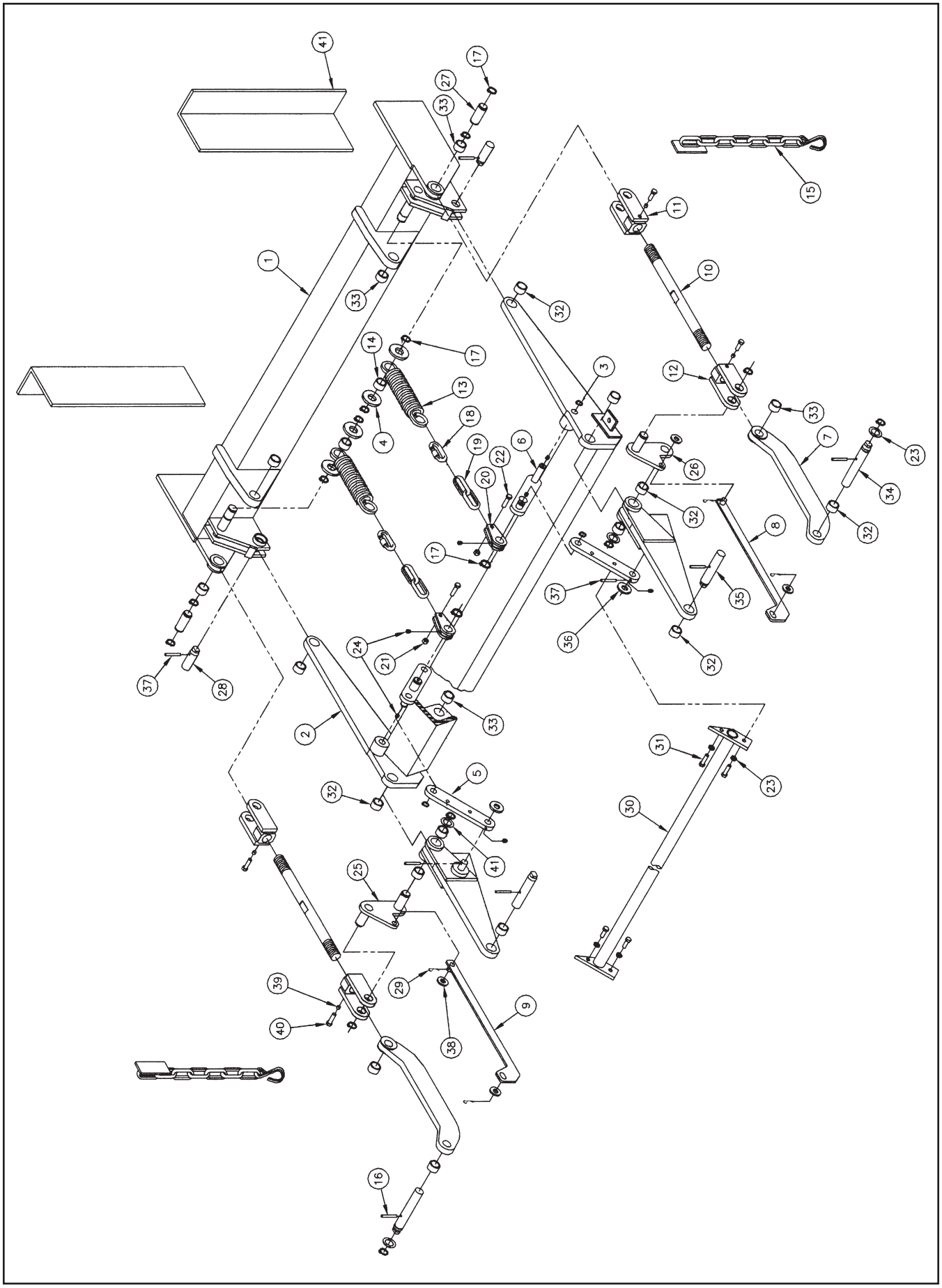
41
17
27
33
15
11
1
10
33
32
14
17
3
12
13
18
4
19
6
22
20
26
33
7
23
34
32
8
17
37
35
36
32
24
21
37
28
33
2
31
23
5
32
30
41
25
39
29
9
40
38
16

TRUNNION, LIFT ARM, & IDLER ARM ASM-6”

Item	Part Number	Description	Qty
1	31046	Trunnion asm	1
2	31055	Lift arm asm	1
3	5781015	Retaining ring	4
4	8107-010	Flatwasher 1.00	4
5	2125	Lower folding link	2
6	31022	Folding link	2
7	31058	Idler arm	2
8	31062-002	Strap weld RH	1
9	31062-001	Strap weld LH	1
10	5019	Adjustment rod	2
11	31374	Clevis LH thread	2
12	31373	Clevis RH thread	2
13	5101120	Spring	2
14	5507-001	Bronze Bearing	2
15	3103751	Chain Asm	2
16	5708-001	Spring pin	4
17	5781008	Retaining ring	16
18	4100340	Chain Link	2
19	4100355	Chain-Two Link	2
20	31211	Link Weld	2
21	9413534	Locknut .38	2
22	5793002	Screw .38 x 1.25	2
23	8107-008	Flatwasher 1.00	4
24	8271291	Zerk	8
25	31284-001	Leveling strap LH	1
26	31284-002	Leveling strap RH	1
27	5009	Pin	2
28	5024	Pin	2
29	8121222	Cotter Pin	4
30	31052	Support pipe	1
31	8180122	Screw .38-16 x 1	4
32	5504-005	Bushing	12
33	5504-001	Bushing	8
34	5018	Pin	2
35	5017	Pin	2
36	9429664	Flatwasher .75	2
37	5702371	Spring pin	4
38	8120396	Flatwasher .50	4
39	4220240	Insert	4
40	8181635	Screw .38-24 x .75	4
41	2037000	4 x 6 x .38 angle	2

10/03 • 2.5C • MP53374